NC ROTARY TABLE

MATSUMOTO MACHINE CO., LTD. (Sales Branches)

TOKYO OFFICE : 101 Hilark-kato 5-13-16 Tiruta Machi Hachiohji, Tokyo 193-0832 Japan Phone:+81-42-673-6896 Facsimile:+81-42-673-6897
OSAKA OFFICE : 202 Premile-Fukuyama 2-1-31 Nagatahigashi Higashiosaka, Osaka 577-0012 Japan Phone:+81-6-6748-5600 Facsimile:+81-6-6748-5601
NAGOYA OFFICE : 133 Yayoi-cho Komaki, Aichi 485-0071 Japan Phone:+81-568-43-0071 Facsimile:+81-568-43-0091

SUBSIDIARY

North America : ILLINOIS/U.S.A.

MMK MATSUMOTO CORPORATION
http://www.mmkmatsumoto.com
16 E. Piper Lane #129 Prospect Heights, IL 60070 U.S.A.
Phone: +1 (0)888 665 1118

EU : LYON/FRANCE

MMK MATSUMOTO EUROPE
12 avenue des Saules 69600 Oullins, France
Phone: +33 (0)472 68 88 70, Facsimile: +33 (0)472 36 30 69

AGENCY

South East Asia

THAILAND

BANGKOK TSUSHO CO., LTD.
http://www.bangkoktsusho.com
67 Soi 58 RAMA 9 Rd., Suanluang, Bangkok 10250 THAILAND
Phone: +66 (0)2 715 3402, Facsimile: +66 (0)2 715 3499

TOOLNET (THAILAND) CO., LTD.
http://www.toolnet.co.th
52/171 Moo.13, Krungthepkreetha Road., Saphansung, Bangkok 10250, THAILAND
Phone: +66 (0)2736 2381 4, Facsimile: +66 (0)2736 2385

SINGAPORE

PRITIC TECHNO INTERNATIONAL PTE LTD.
http://www.pritictechno.com
194 Pandan Loop, #07-18 Pantech Industrial Complex, SINGAPORE 128383
Phone: +65 (0)6779 2666, Facsimile: +65 (0)6779 4588

HANOI

SANWA SEIMITSU VIETNAM JOINT STOCK COMPANY
http://www.sanwa-seimitsu.com.vn/
1st Floor, HL Tower Building, Block A2B, 82 Duy Tan St., Dich Vong Hau Ward, Cau Giay Dist., Hanoi, VIETNAM
Phone: +84-(0)4-3226-2201, Facsimile: +84-(0)4-3226-2203

HO CHI MINH

SANWA SEIMITSU VIETNAM JOINT STOCK COMPANY
3rd Floor, Hoan Vu Office Building, 225 Hai Ba Trung Street, Ward 6, District 3, Ho Chi Minh City, VIETNAM

East Asia

SOUTH KOREA

SM KOREA CORPORATION
http://www.sm-korea.com
2F, 137 Donggyo-Ro, Mapo-Gu, Seoul, South Korea
Phone: +82 (0)2 338 5017, Facsimile: +82 (0)2 338 5019

TAIWAN

ITI AHFHA INC. TAIPEI BRANCH
4F., No.66, Sec. 1, Zhongshan N. Rd., Zhongshan Dist., Taipei City 10444, Taiwan (R.O.C.)
Phone: +886 (0)2 2567 1525, Facsimile: +886 (0)2 2567 1527

CHINA

ITI SHANGHAI OFFICE
9H, Aile Building, No.631, Ling-Ling Road, Xu-Hui District, Shanghai, CHINA (Zip:200030)
Phone: +86 (0)21 6487 4587, Facsimile: +86 (0)21 6487 2761

Beijing SMK Trading CO., LTD.
1602, 602 hao, Wangjing-yuan, Zhaoyang-qu , Beijing , China
Phone:+86 138 5109 7120

Table · E-9 · 1809 · 01 · Printed in Japan

JISQ 9100 JQA-AS 0110 HEAD OFFICE · FACTORY

ISO 9001 JQA-1723 HEAD OFFICE · FACTORY TOKYO, OSAKA, NAGOYA

MATSUMOTO MACHINE CO., LTD.
http://www.mmkchuck.com
HEAD OFFICE : Ni-80 Shimeno-machi Kanazawa, Ishikawa 920-0059 Japan Phone:+81-76-267-3211 Facsimile:+81-76-268-5279

Benefits of MMK NC Rotary Tables

1 Large Through-Hole

Provides versatility in machining of more complex and/or long parts.
Easier to install peripheral parts for multiple applications.

2 Extremely Rigid Spindle

Spindle is extremely rigid because of it's constructed with three (3) roller bearings.

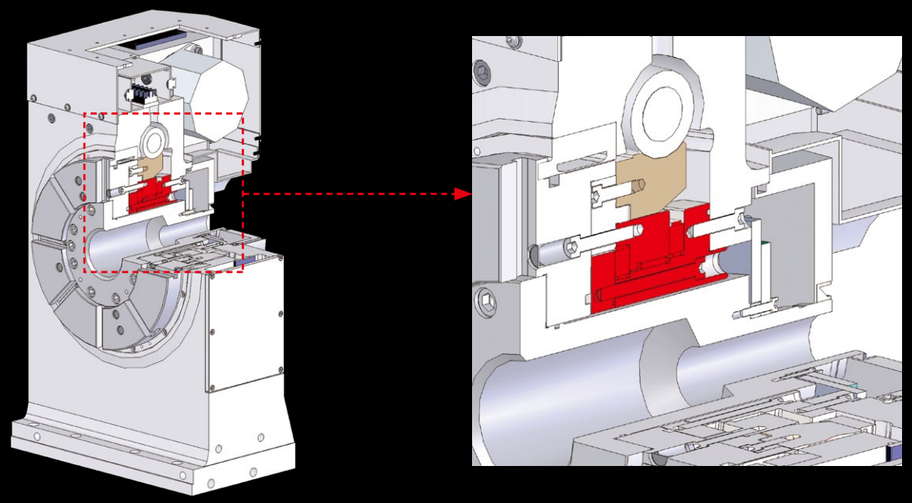

3 Highly Accurate Brass Worm Wheel & Worm Shaft

Zero-backlash is obtained using patented brass worm wheel and two-part worm shaft; made by German company "OTT".
The backlash of wheel and shaft can adjust to a minimum of 0.003mm.

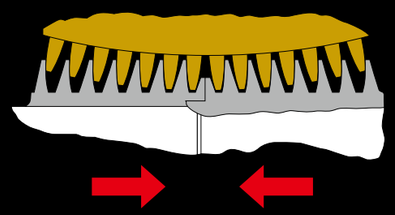

4 Strong Clamping Force

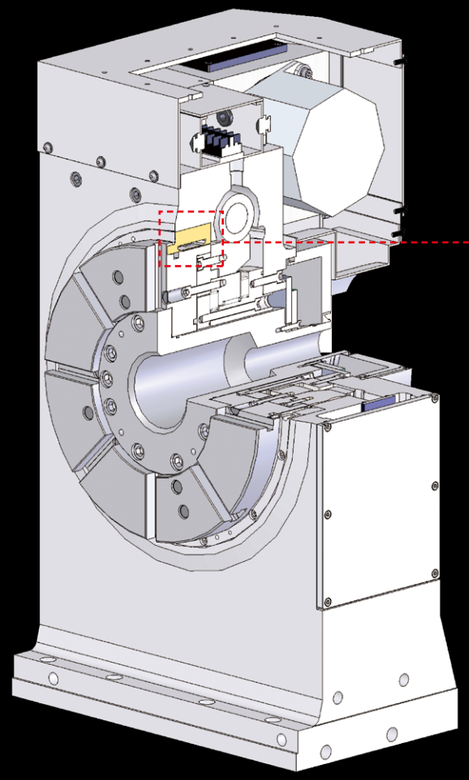

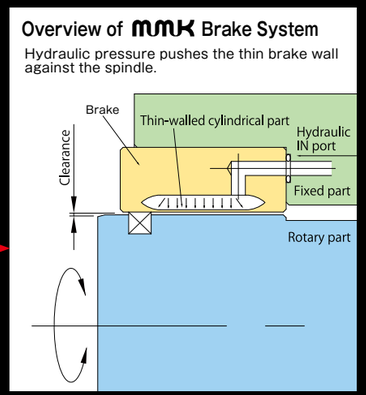

Original MMK Diaphragm Brake System

MMK NC Rotary Tables Provide:

- ☆ Durability & Longevity
- ☆ Compact Designs
- ☆ Strong Clamping Force
- ☆ Highly Responsive
- ☆ Low Maintenance

mmk NC Rotary Tables Enhance Your Machine Tools

MC : Machining Center
EDM : Electric Discharge Machine

Vertical or Horizontal MC — Vertical or Horizontal

MDH P6

MD P8

Horizontal MC — Vertical only

MDU P10

Horizontal Special-Purpose Machine — Horizontal only

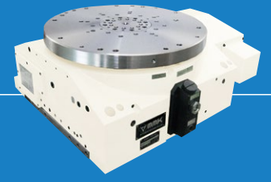

MDO P12

Horizontal High-Speed Machine — Vertical only

MDVi P14

Vertical or Horizontal MC — 5-face or 5-axis Machining

MDAT P16

Grinding Center — Vertical or Horizontal

MT P18

EDM — Dielectric Fluid only, Vertical or Horizontal

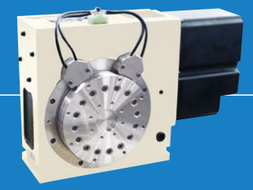

MDE P20

EDM for Wirecutting & Small-Hole Drilling — Deionized Water only, Vertical or Horizontal

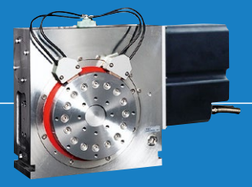

MDW P22

Vertical High-Speed MC

Direct Drive Motor (1-axis)

DD P24

Direct Drive Motor (2-axis)

DDAT P24

Table Accessories

Controller (for 1-axis / 2-axis)

PNC P26

Tail Stock
- Manual — TC・THC P28
- Hydraulic — TP・THP P29

Chuck
- Manual — M・RS P30
- Hydraulic — Z・HH P31

Air-Hydraulic Booster

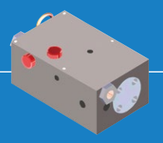

AH P32

Dimensions for T-Slot / Clamping Bolt — P32
Standard of Accuracy — P33
Applications — P34

MDH TYPE
Vertical or Horizontal Position

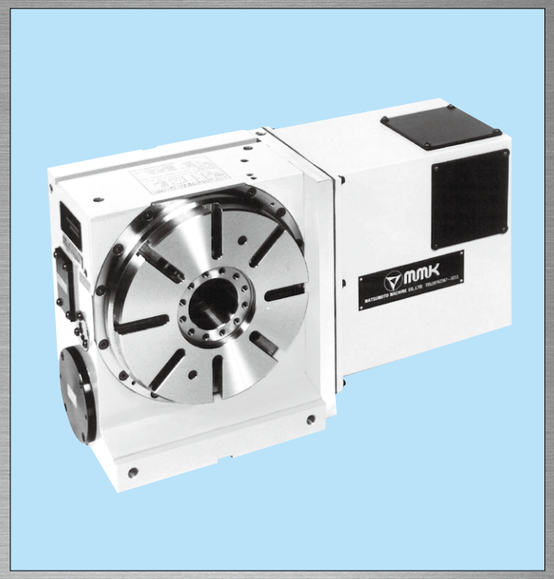

NC Rotary Table

- Highly Accurate, Rigid, & Durable
- Most suitable for vertical machining center
  → Less interference between spindle and work-piece
- Zero-Backlash Worm Gear system
- Compact external form
- Large through-hole provides increased versatility

- MDH233R
- MDH253R
- MDH256R
- MDH323R
- MDH356R
- MDH453R
- MDH630R

Note1: ( ) = higher indexing accuracy model with rotary scale.
In this case, the outside drawing will change slightly. (T.I.R)
Note2: Option: Built-in rotary joint is possible.

Specifications

Item \ Model		Unit	MDH233R	MDH253R	MDH256R	MDH323R	MDH356R	MDH453R	MDH630R
Table Diameter		mm	230	250	250	325	355	450	630
Vertical Center Height		mm	185	210	210	235	235	255	400
Horizontal Center Height		mm	200	255	255	220	270	290	370
Through Hole		mm	60	115	115	115	150	205	370
T Slot Width		mm	12H8	12H8	12H8	14H7	14H7	14H7	18H8
Guide Block Width		mm	18h7	18h7	18h7	18h7	18h7	18h7	22h7
Servo Motor (FANUC*)			α is8/4000	α is12/4000	α is12/4000	α is22/4000	α is22/4000	α is22/4000	α is30/4000
Gear Ratio			1/60	1/60	1/12	1/60	1/36	1/60	1/180
Max. R.P.M		min^{-1}	33.3	33.3	200	33.3	66.7	33.3	8.3
Motor R.P.M		min^{-1}	2000	2000	2400	2000	2400	2000	1500
Min. Indexing Unit		deg.	0.001	0.001	0.001	0.001	0.001	0.001	0.001
Indexing Accuracy		sec.	12(6)	12(6)	45(20)	12(6)	18(6)	12(6)	12(6)
Repeatability		sec.	± 2(2)	± 2(2)	± 3(4)	± 2(2)	± 2(2)	± 2(2)	± 2(2)
Clamping Torque		N・m	284	764	764	2303	3067	4674	3700
Clamping Pressure		MPa	4.9	4.9	4.9	4.9	4.9	4.9	4.9
Permissible Machining Torque of Wheel		N・m	735	735	1000	1117	1900	2200	6910
Weight		kg	110	180	180	220	320	420	950
Permissible Load	GL	kg	200	250	250	350	400	500	2500
	GL	kg	100	120	120	150	200	350	800
Max. Machining Force at Clamping	F	N	27000	32000	32000	46500	54000	56000	85000
	L F	N・m	1150	2240	2240	4900	5700	6400	8600
	L F	N・m	284	764	764	2303	3067	4675	3700
Permissible Work Inertia		$kg \cdot m^2$	1.9	2.81	1.95	6.45	9.07	18.23	178.6

*Application for other motors, Meldas, Yasukawa, Siemens etc.

MDH233R

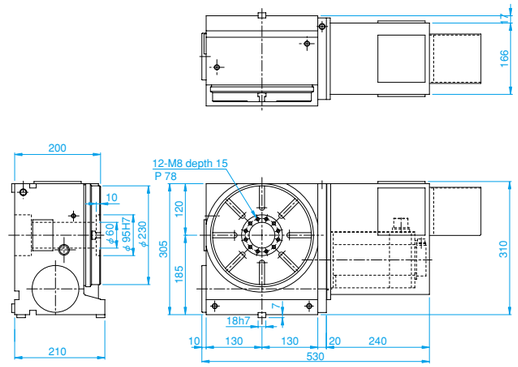

MDH253R
MDH256R

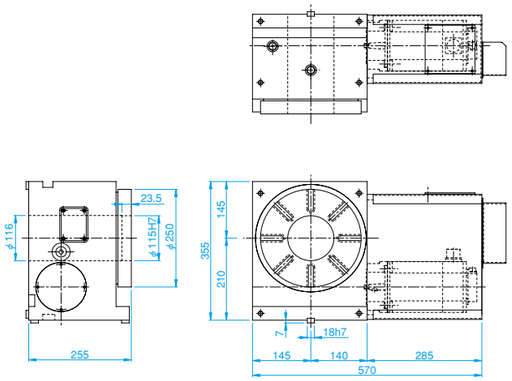

MDH323R

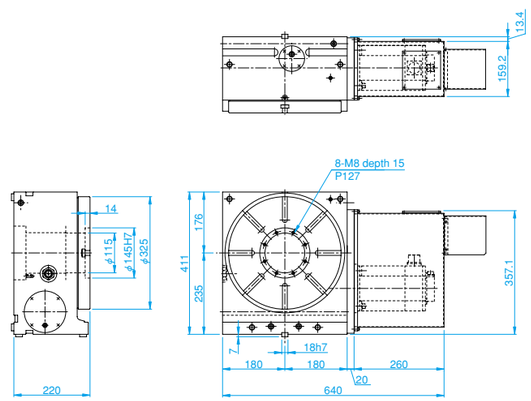

MDH356R

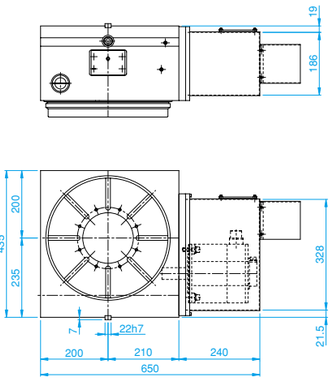

MDH453R

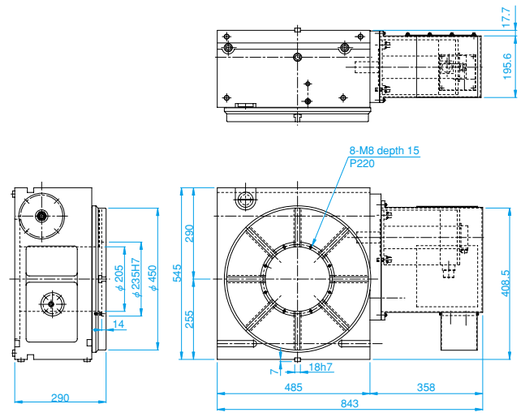

MDH630R

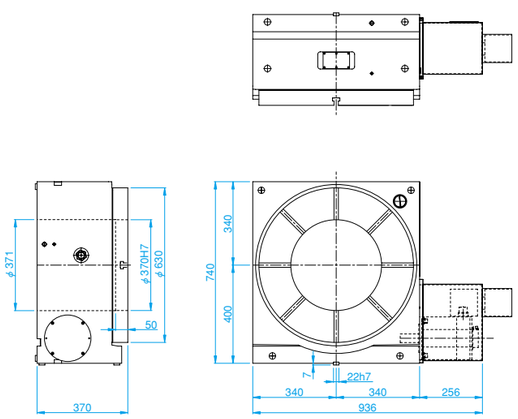

MD TYPE
Vertical or Horizontal Position

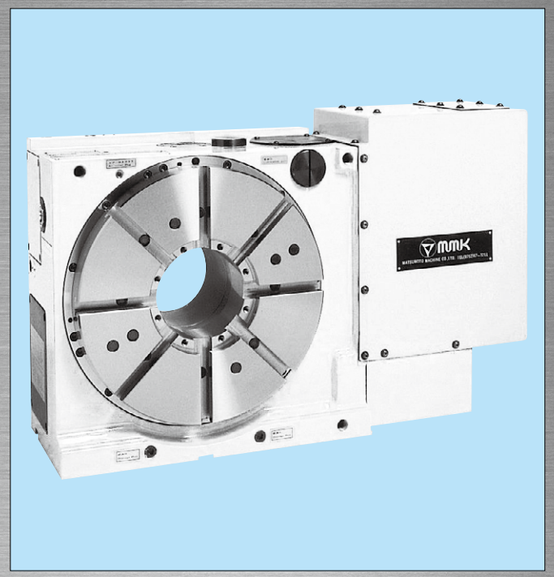

NC Rotary Table

- Most suitable for vertical machining center
  → Less interference between spindle and work-piece
- Zero-Backlash Worm Gear system
- Compact external form
- Large through-hole provides increased versatility

- MD323R
- MD400R
- MD403R
- MD500R
- MD503R
- MD630R
- MD632R
- MD800R
- MD802R
- MD1000R
- MD1200R

Note1: ( ) = higher indexing accuracy model with rotary scale.
In this case, the outside drawing will change slightly. (T.I.R)
Note2: Option: Built-in rotary joint is possible.

Specifications

Item \ Model	Unit	MD323R	MD400R	MD403R	MD500R	MD503R	MD630R	MD632R	MD800R	MD802R	MD1000R	MD1200R
Table Diameter	mm	325	400	400	500	500	630	630	800	800	1000	1200
Vertical Center Height	mm	210	255	255	280	280	400	400	480	480	600	****
Horizontal Center Height	mm	220	290	290	290	290	325	325	360	325	400	400
Through Hole	mm	115	170	170	170	170	260	260	260	260	315	320
T Slot Width	mm	14H7	14H7	14H7	18H7	18H7	18H7	18H7	18H7	18H7	28H12	28H12
Guide Block Width	mm	18h7	18h7	18h7	18h7	18h7	22h7	22h7	22h7	22h7	28h7	***
Servo Motor (FANUC*)		α is22/4000	α is22/4000	α is22/4000	α is22/4000	α is22/4000	α is22/4000	α is22/4000	α is22/4000	α is30/4000	α is30/4000	α is30/4000
Gear Ratio		1/60	1/180	1/60	1/180	1/60	1/360	1/120	1/360	1/120	1/360	1/720
Max. R.P.M	min^{-1}	33.3	11.1	33.3	8.3	33.3	5.5	16.7	5.5	16.7	4.1	2
Motor R.P.M	min^{-1}	2000	2000	2000	1500	2000	2000	2000	2000	2000	1500	1440
Min. Indexing Unit	deg.	0.001	0.001	0.001	0.001	0.001	0.001	0.001	0.001	0.001	0.001	0.001
Indexing Accuracy	sec.	12(6)	12(6)	12(6)	12(6)	12(6)	12(6)	12(6)	12(6)	12(6)	12(6)	12(6)
Repeatability	sec.	± 2(2)	± 2(2)	± 2(2)	± 2(2)	± 2(2)	± 2(2)	± 2(2)	± 2(2)	± 2(2)	± 2(2)	± 2(2)
Clamping Torque	N · m	2303	4674	4674	4674	4674	4410	4410	4410	4410	8520	9604
Clamping Pressure	MPa	4.9	4.9	4.9	4.9	4.9	4.9	4.9	4.9	4.9	4.9	4.9
Permissible Machining Torque of Wheel	N · m	1117	1980	2200	1980	2200	6910	7500	6910	7500	12000	16500
Weight	kg	220	420	420	470	420	980	980	1500	1500	3300	3500
Permissible Load (Gb)	kg	350	500	500	500	500	2500	2500	2500	2500	6000	6000
Permissible Load (GL)	kg	150	350	350	350	350	800	800	800	800	1200	****
Max. Machining Force at Clamping (F)	N	46500	56000	56000	56000	56000	75000	75000	75000	75000	96000	96000
Max. Machining Force at Clamping (L·F)	N · m	4900	6400	6400	6400	6400	7000	7000	7000	7000	9000	9000
Max. Machining Force at Clamping (L1·F)	N · m	2303	4675	4675	4675	4675	4410	4410	4410	4410	8520	9604
Permissible Work Inertia	kg · m^2	6.45	14.4	14.4	22.5	22.5	178.6	178.6	288	288	1080	1555

*Application for other motors, Meldas, Yasukawa, Siemens etc.

MD323R

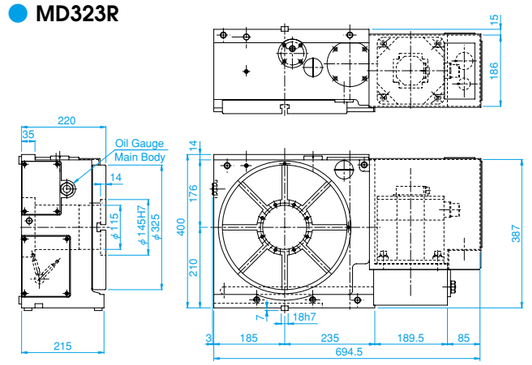

MD400R
MD403R

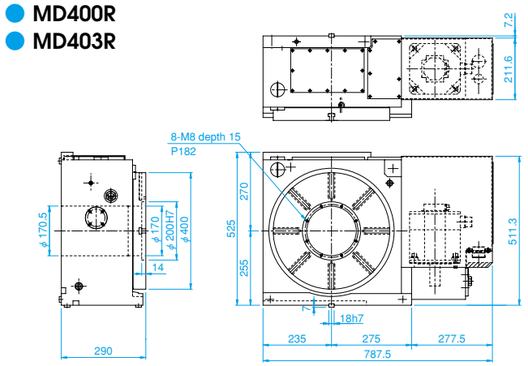

MD500R
MD503R

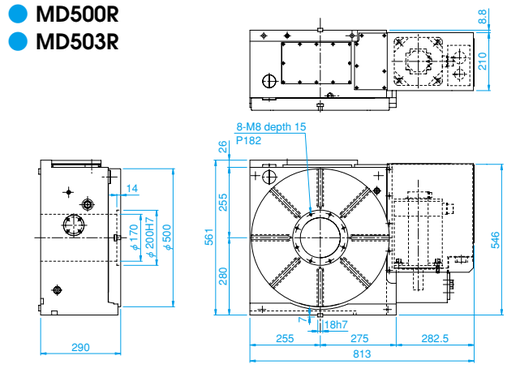

MD630R
MD632R

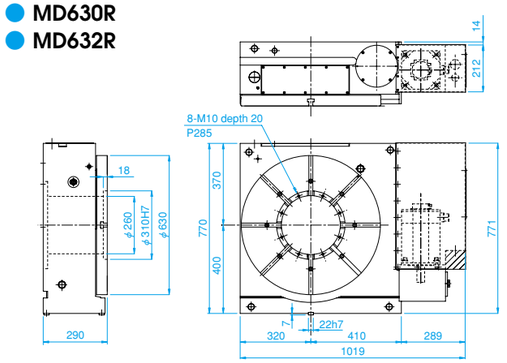

MD800R
MD802R

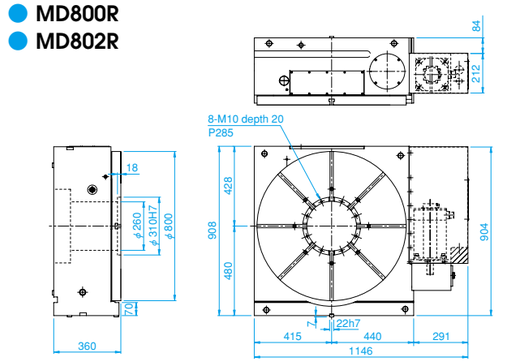

MD1000R

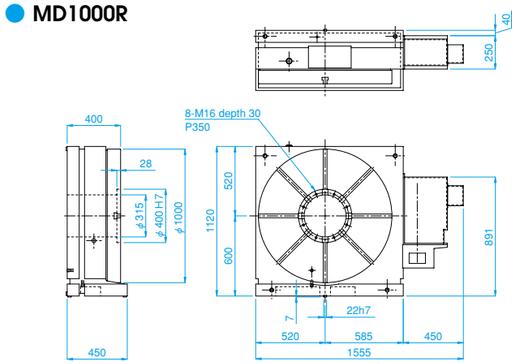

MD1200R

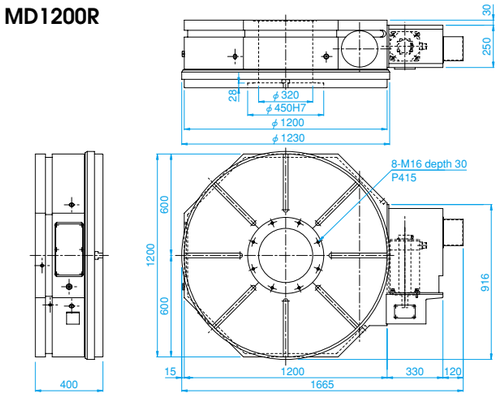

MDU TYPE
Vertical Position

NC Rotary Table

- Most suitable for horizontal machining center
  → Less interference between spindle and work-piece
- Zero-Backlash Worm Gear system
- Compact external form
- Large through-hole provides increased versatility

- MDU253L
- MDU323R
- MDU400R
- MDU403R
- MDU500R
- MDU503R
- MDU630R
- MDU632R※
- MDU800R
- MDU802R※
- MDU1000R
- MDU1200R

※ Optional machines models MDU632RG and MDU802RG with greater rigidity for incredible power and precision.

Note1: ( ) = higher indexing accuracy model with rotary scale.
In this case, the outside drawing will change slightly. (T.I.R)
Note2: Option: Built-in rotary joint is possible.

Specifications

Item \ Model	Unit	MDU253L	MDU323R	MDU400R	MDU403R	MDU500R	MDU503R	MDU630R	MDU632R	MDU800R	MDU802R	MDU1000R	MDU1200R
Table Diameter	mm	250	325	400	400	500	500	630	630	800	800	1000	1200
Vertical Center Height	mm	150	210	255	255	280	280	400	400	480	480	590	760
Horizontal Center Height	mm	****	****	****	****	****	****	****	****	****	****	****	****
Through Hole	mm	60	115	170	170	170	170	260	260	260	260	315	50
T Slot Width	mm	12H8	14H7	14H7	14H7	18H7	18H7	18H7	18H7	18H7	18H7	28H12	28H12
Guide Block Width	mm	18h7	18h7	18h7	18h7	18h7	18h7	22h7	22h7	22h7	22h7	22h7	22h7
Servo Motor (FANUC*)		α is8/4000	α is22/4000	α is22/4000	α is22/4000	α is22/4000	α is22/4000	α is22/4000	α is30/4000	α is22/4000	α is30/4000	α is30/4000	α is30/4000
Gear Ratio		1/60	1/60	1/180	1/60	1/180	1/60	1/360	1/120	1/360	1/120	1/360	1/720
Max. R.P.M	min^{-1}	33.3	33.3	8.3	33.3	8.3	33.3	5.5	16.7	5.5	16.7	4.1	1.66
Motor R.P.M	min^{-1}	2000	2000	1500	2000	1500	2000	2000	2000	2000	2000	1500	1200
Min. Indexing Unit	deg.	0.001	0.001	0.001	0.001	0.001	0.001	0.001	0.001	0.001	0.001	0.001	0.001
Indexing Accuracy	sec.	12(6)	12(6)	12(6)	12(6)	12(6)	12(6)	12(6)	12(6)	12(6)	12(6)	12(6)	12(6)
Repeatability	sec.	± 2(2)	± 2(2)	± 2(2)	± 2(2)	± 2(2)	± 2(2)	± 2(2)	± 2(2)	± 2(2)	± 2(2)	± 2(2)	± 2(2)
Clamping Torque	N・m	764	2303	4675	4675	4675	4675	4410	4410	5390	5390	8520	13720
Clamping Pressure	MPa	4.9	4.9	4.9	4.9	4.9	4.9	4.9	4.9	4.9	4.9	4.9	4.9
Permissible Machining Torque of Wheel	N・m	75	1117	1980	2200	1980	2200	6910	7500	6910	7500	12000	12000
Weight	kg	130	230	450	450	470	470	1300	1300	1750	1750	3300	4000
Permissible Load (Gb)	kg	****	****	****	****	****	****	****	****	****	****	****	****
Permissible Load (GL)	kg	120	150	350	350	350	350	800	800	800	800	1200	1200
Max. Machining Force at Clamping (F)	N	32000	46500	56000	56000	56000	56000	75000	75000	75000	75000	96000	96000
Max. Machining Force at Clamping (L・F)	N・m	2240	4900	6400	6400	6400	6400	7000	7000	7000	7000	9000	9000
Max. Machining Force at Clamping (L・F)	N・m	764	2303	4675	4675	4675	4675	4410	4410	5390	5390	8520	8520
Permissible Work Inertia	kg・m^2	2.81	6.45	14.4	14.4	22.5	22.5	178.6	178.6	288	288	1080	1080

*Application for other motors, Meldas, Yasukawa, Siemens etc.

MDU253L

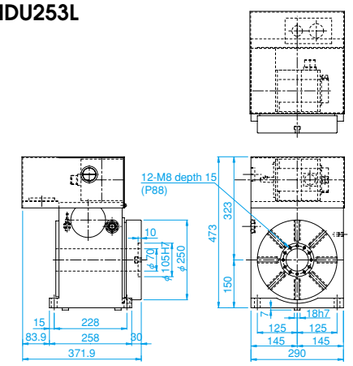

MDU323R

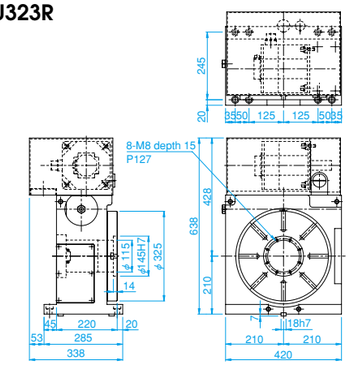

MDU400R
MDU403R

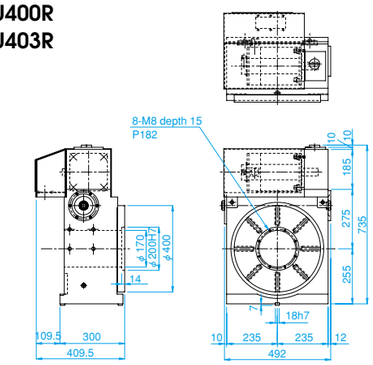

MDU500R
MDU503R

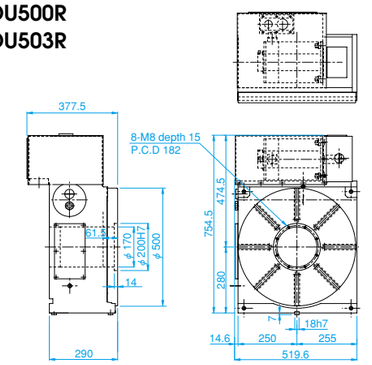

MDU630R
MDU632R

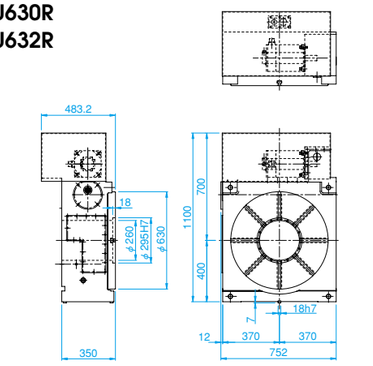

MDU800R
MDU802R

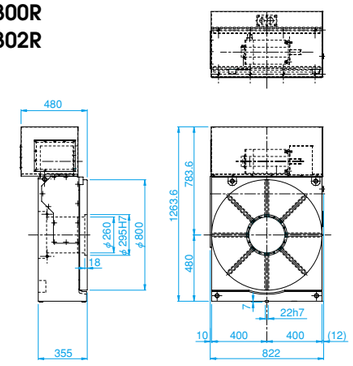

MDU1000R

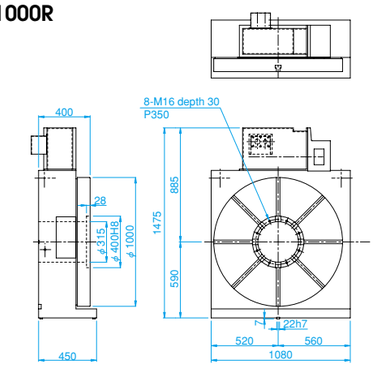

MDU1200R

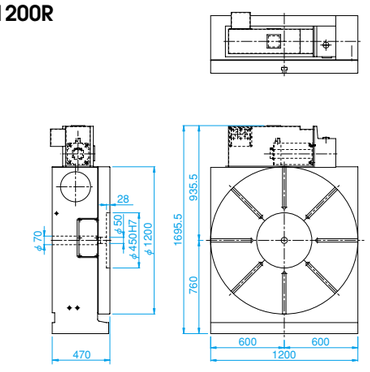

MDO TYPE
Horizontal Position

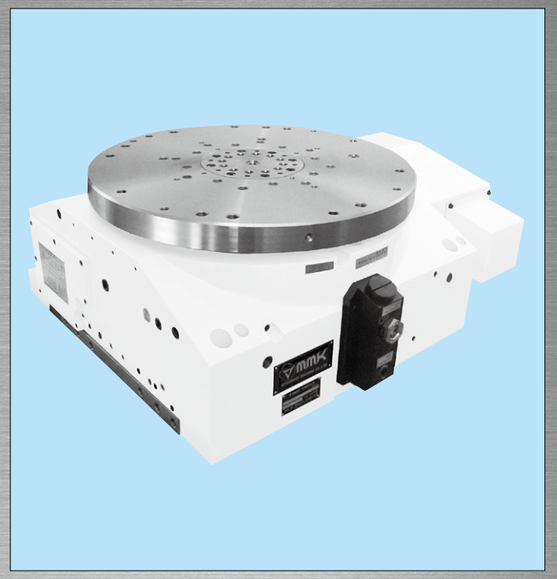

NC Rotary Table

- Outstanding Flexible Manufacturing System (FMS)
- Best for production line, mass production of parts
- Most suitable for horizontal machining center
- Zero-Backlash Worm Gear system
- Compact external form
- Built-in rotary joint (4-12 ports)

- **MDO333R**
- **MDO403R**
- **MDO503R**
- **MDO603R**

MDO333R

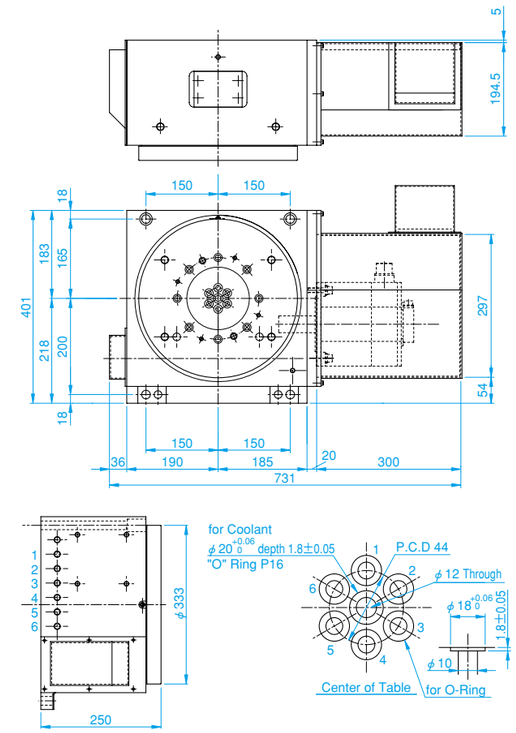

MDO403R

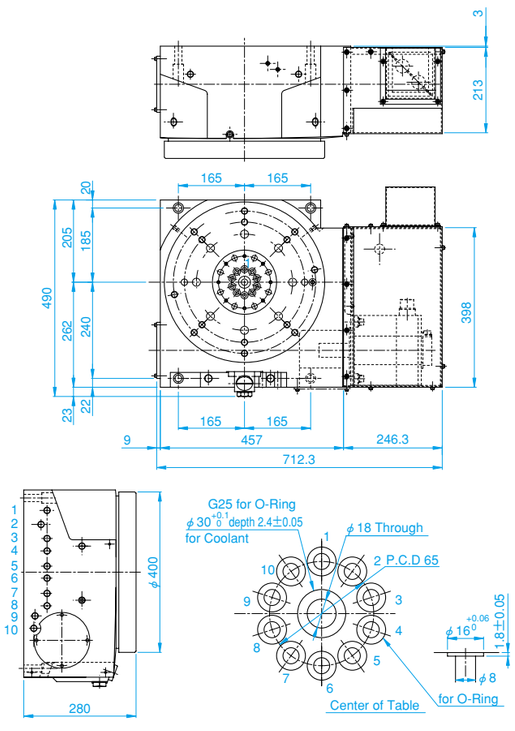

MDO503R

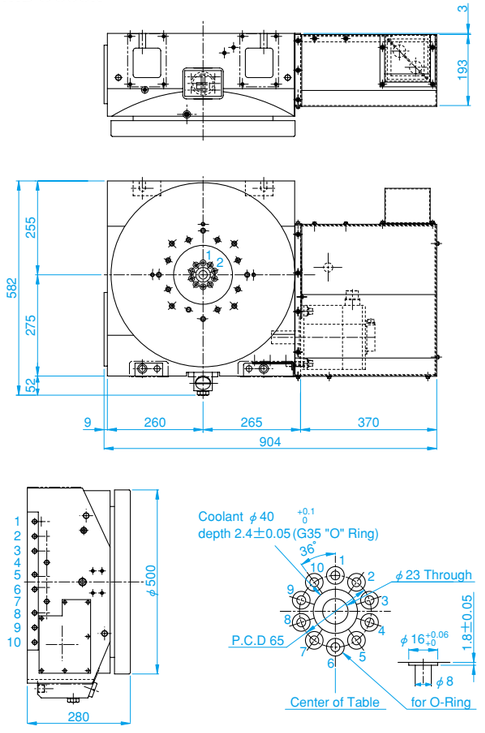

MDO603R

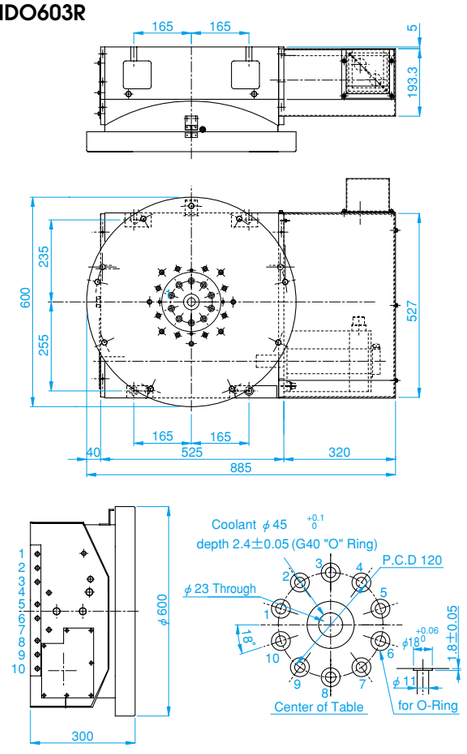

Specifications

Item \ Model		Unit	MDO333R	MDO403R	MDO503R	MDO603R
Table Diameter		mm	333	400	500	600
Vertical Center Height		mm	****	****	****	****
Horizontal Center Height		mm	250	280	280	300
Through Hole		mm	****	****	****	****
T Slot Width		mm	****	****	****	****
Guide Block Width		mm	****	****	****	****
Servo Motor (FANUC*)			α is22/4000	α is22/4000	α is22/4000	α is22/4000
Gear Ratio			1/60	1/60	1/60	1/60
Max. R.P.M		min^{-1}	33.3	33.3	33.3	33.3
Motor R.P.M		min^{-1}	2000	2000	2000	2000
Min. Indexing Unit		deg.	0.001	0.001	0.001	0.001
Indexing Accuracy		sec.	14	12	12	12
Repeatability		sec.	± 2	± 2	± 2	± 2
Clamping Torque		N・m	2303	3067	3067	4675
Clamping Pressure		MPa	4.9	4.9	4.9	4.9
Permissible Machining Torque of Wheel		N・m	735	1117	1117	1117
Weight		kg	205	350	430	460
Permissible Load	GL	kg	400	500	900	1200
	GL	kg	****	****	****	****
Max. Machining Force at Clamping	F	N	32000	56000	56000	56000
	LF	N・m	2240	6400	7000	7500
	LF	N・m	2303	3067	3067	4675
Permissible Work Inertia		kg・m^2	9.8	14.4	28.1	54

*Application for other motors, Meldas, Yasukawa, Siemens etc.

MDVi TYPE
Vertical Position

NC Rotary Table

- Features high-precision OTT Worm Gear for greater power transmission
- Ideal for Scroll Machining or high speed applications

- **MDVi 216**
- **MDVi 346**

Note1: Rotary scale is attached to 「 i 」 model. (T.I.R)
Note2: Option: Built-in rotary joint is possible.

Specifications

Item \ Model		Unit	MDVi216	MDVi346
Table Diameter		mm	210	340
Vertical Center Height		mm	190	230
Horizontal Center Height		mm	****	****
Through Hole		mm	****	35
T Slot Width		mm	****	****
Guide Block Width		mm	****	****
Servo Motor (FANUC*)			α is22/4000	α is22/4000
Gear Ratio			1/12	1/12
Max. R.P.M		min^{-1}	166.7	150
Motor R.P.M		min^{-1}	2000	1800
Min. Indexing Unit		deg.	0.001	0.001
Indexing Accuracy		sec.	20	20
Repeatability		sec.	± 2	± 2
Clamping Torque		N・m	****	****
Clamping Pressure		MPa	****	****
Permissible Machining Torque of Wheel		N・m	100	100
Weight		kg	200	320
Permissible Load		kg	****	****
		kg	100	120
Max. Machining Force at Clamping		N	****	****
		N・m	****	****
		N・m	****	****
Permissible Work Inertia		$kg・m^2$	0.55	1.73

*Application for other motors, Meldas, Yasukawa, Siemens etc.

MDVi216

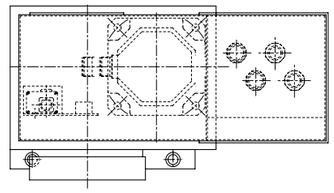

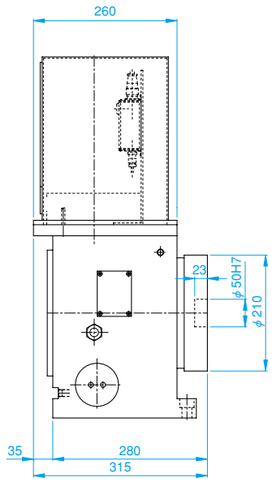

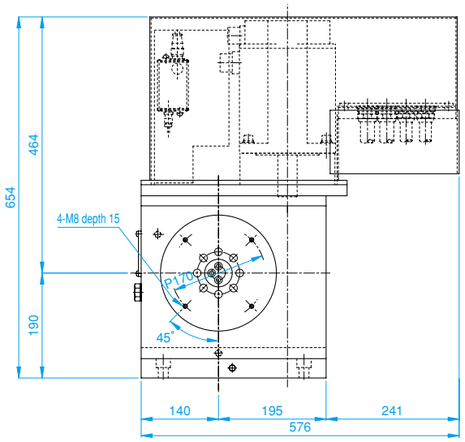

MDVi346

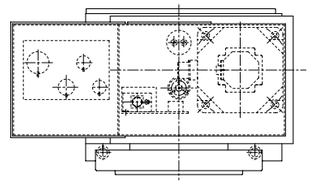

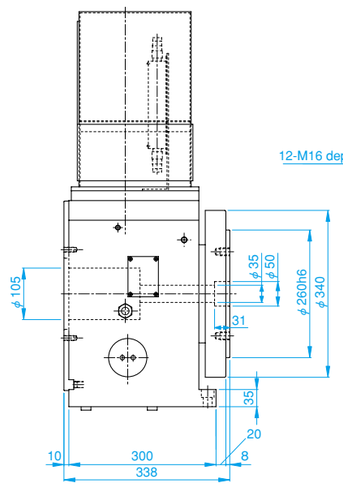

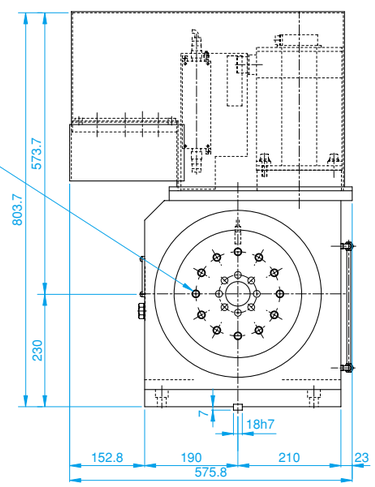

MDAT TYPE

5-face or 5-axis Machining Center

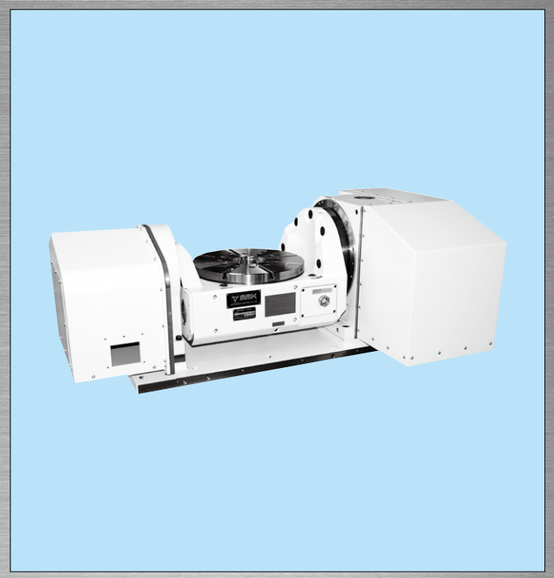

NC Tilting Rotary Table

- Designed for 3D cutting, processing
- Most suitable for high-tolerance, five-axis machining
- High-precision OTT Worm Gear results in superior performance in rotary and tilt operations

- MDAT232DS
- MDAT353S-ECT
- MDAT403US-ECT
- MDAT630D

Note1: ( ) = higher indexing accuracy model with rotary scale.
In this case, the outside drawing will change slightly. (T.I.R)
Note2: Option: Built-in rotary joint is possible.

Specifications

Item \ Model		Unit	MDAT232DS	MDAT353S-ECT	MDAT403US-ECT	MDAT630D
Table Diameter		mm	230	350	400	630
Tilting Axis Center Height		mm	210	320	475	480
Table Height in Horizontal		mm	295	320	495	625
Through Hole		mm	60	80	****	254
T Slot Width		mm	12H8	12H8	****	18H7
Servo Motor (FANUC*)	Rotary Axis		α is8/4000	α is8/4000	α is22/4000	α is22/4000
	Tilting Axis		α is8/4000	α is12/4000	α is22/4000	α is22/4000
Gear Ratio	Rotary Axis		1/120	1/90	1/60	1/360
	Tilting Axis		1/120	1/120	1/90	1/360
Max. R.P.M	Rotary Axis	min^{-1}	16.7	33.3	33.3	5.5
	Tilting Axis	min^{-1}	5	25	11.1	2
Motor R.P.M	Rotary Axis	min^{-1}	2000	3000	2000	2000
	Tilting Axis	min^{-1}	600	3000	1000	720
Min. Indexing Unit	Rotary Axis	deg.	0.001	0.001	0.001	0.001
	Tilting Axis	deg.	0.001	0.001	0.001	0.001
Indexing Accuracy	Rotary Axis	sec.	14(6)	14(10)	12(6)	12(6)
	Tilting Axis	sec.	45(10)	60(30)	60(10)	45(10)
Repeatability	Rotary Axis	sec.	± 2(3)	± 2(3)	± 2(2)	± 2(2)
	Tilting Axis	sec.	± 3(4)	± 3(4)	± 3(3)	± 3(3)
Clamping Torque	Rotary Axis	N・m	333	1666	4674	1764
	Tilting Axis	N・m	1250	2156	4674	3952
Clamping Pressure	Rotary Axis/Tilting Axis	MPa	4.9	4.9	4.9	4.9
Premissible Machining Torque of Wheel		N・m	735	735	1980	6910
Weight		kg	290	515	1650	2500
Permissible Load		kg	80	265	490	500
Permissible Work Inertia		$kg・m^2$	0.5	1.1	12.8	35.7

*Application for other motors, Meldas, Yasukawa, Siemens etc.

MDAT232DS

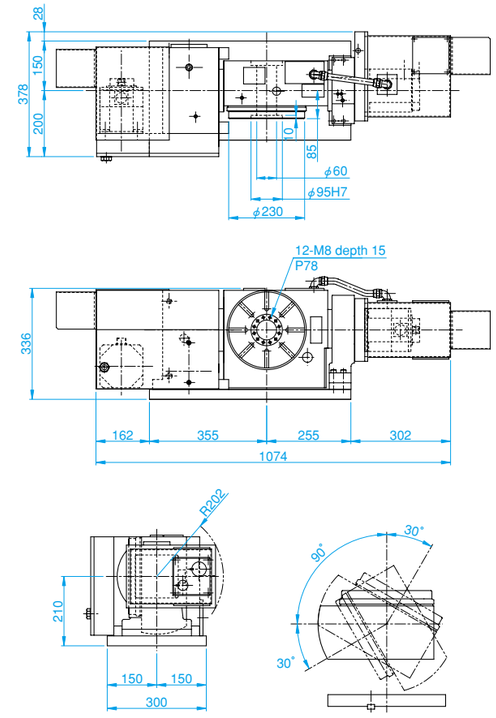

MDAT353S-ECT

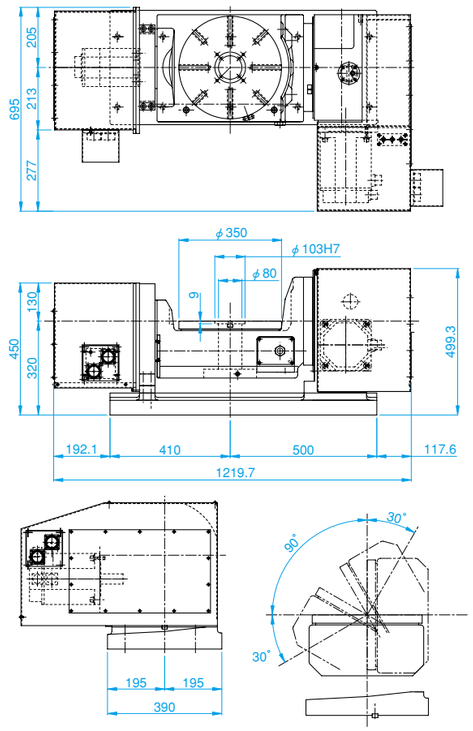

MDAT403US-ECT

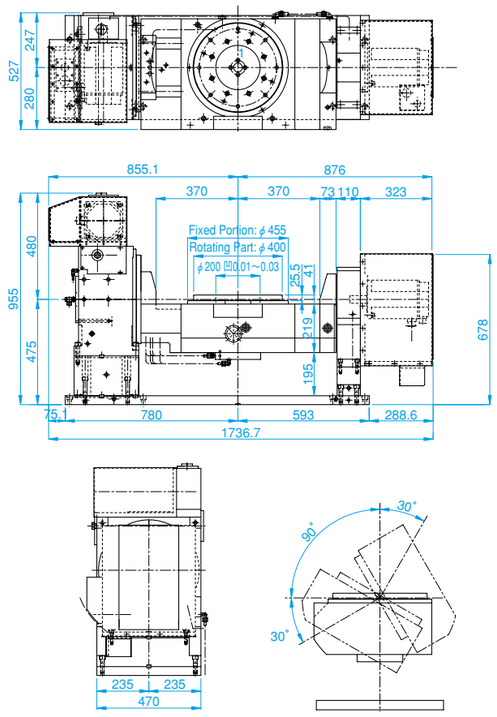

MDAT630D

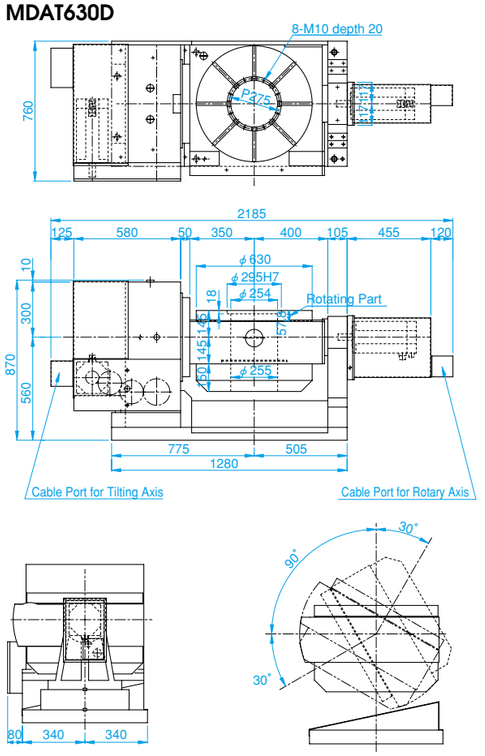

MT TYPE
Vertical or Horizontal Position

Precision Spinning Table

- High precision, high speed system
- Most suitable for grinding center and jig grinder
- Recommended for machining of ceramic and glass
- Able to attach special controller

- MT200R-1
- MT200R-3
- MT200R-5
- MT320R-3
- MT500R-1

Specifications

Item \ Model		Unit	MT200R-1	MT200R-3	MT200R-5	MT320R-3	MT500R-1
Table Diameter		mm	200	200	200	320	500
Vertical Center Height		mm	140	140	140	210	****
Horizontal Center Height		mm	185	185	200	260	302
Through Hole		mm	****	****	****	50	****
T Slot Width		mm	12H8	12H8	12H8	14H7	14H7
Guide Block Width		mm	18h7	18h7	18h7	18h7	18h7
Servo Motor			800W	800W	800W	α is22/4000	2.2KW
Gear Ratio			1/20	1/10	1/6	1/6	1/30.05
Max. R.P.M		min^{-1}	100	300	500	300	100
Motor R.P.M		min^{-1}	2000	3000	3000	1800	421
Rotating Accuracy		μ m	2	2	2	2	5
Indexing Function			N/A	N/A	N/A	Available	N/A
Clamping Torque		N・m	216	216	****	480	****
Clamping Pressure		MPa	4.9	4.9	****	4.9	****
Permissible Machining Torque of Wheel		N・m	122.5	8.8	13.7	7467	17.6
Weight		kg	80	80	100	270	550
Permissible Load	GL	kg	45	45	30	90	670
	GL	kg	20	20	15	40	****
Max. Machining Force at Clamping	F	N・m	216	216	****	480	****
Permissible Work Inertia		$kg・m^2$	0.225	0.225	1	1.15	20.93
OTT Worm Gear system			×	×	×	○	○

MT200R-1
MT200R-3

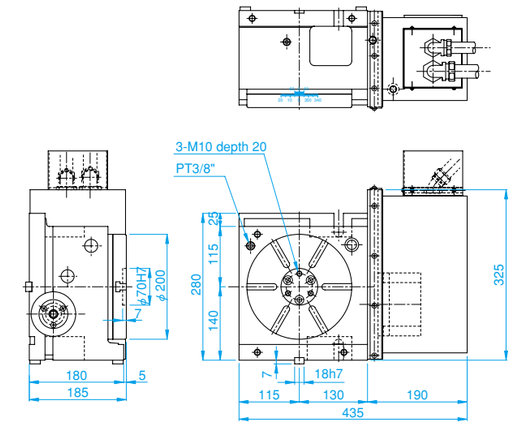

MT200R-5

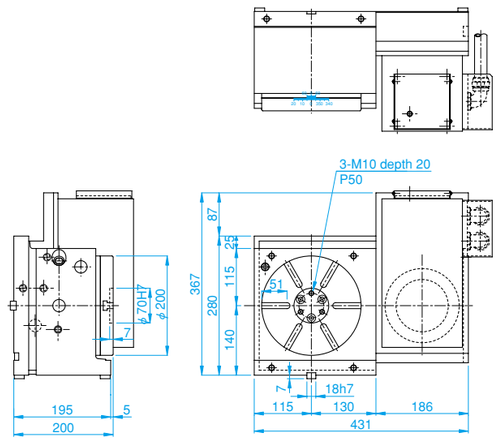

MT320R-3

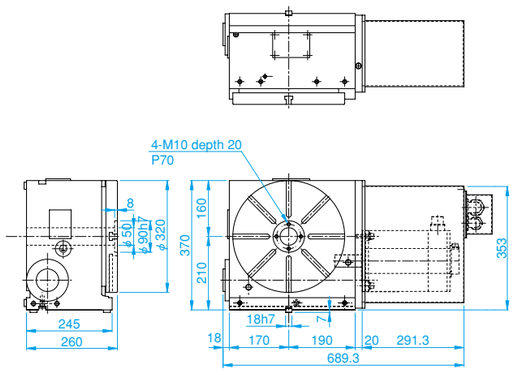

MT500R-1

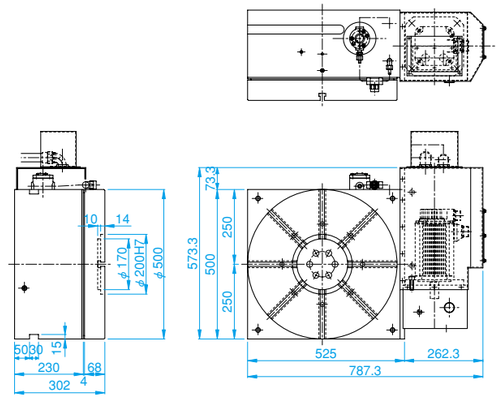

MDE TYPE

EDM - Dielectric Fluid

Vertical or Horizontal Position

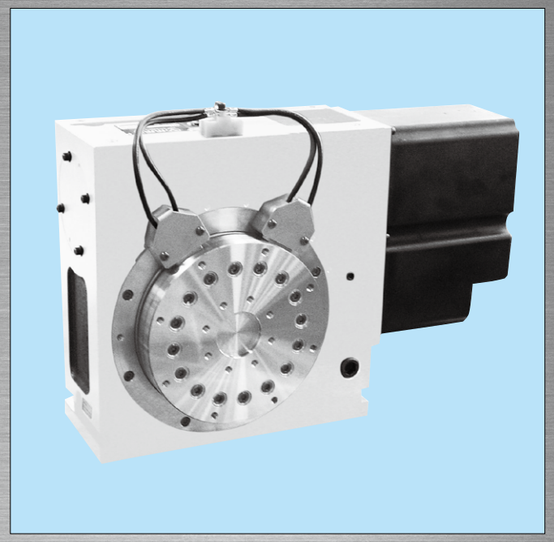

NC Rotary Table for Electric Discharge Machine

- Most suitable for electric discharge machining of large-diameter plates
- Fully submersible in dielectric fluid
- Zero-Backlash Worm Gear system

- **MDE150R**
- **MDHE201R**
- **MDE400L**
- **MDE630R**

Note1: ( ) = higher indexing accuracy model with rotary scale.
In this case, the outside drawing will change slightly. (T.I.R)

Specifications

Item \ Model		Unit	MDE150R	MDHE201R	MDE400L	MDE630R
Table Diameter		mm	150	200	400	630
Vertical Center Height		mm	120	140	235	400
Horizontal Center Height		mm	175	175	310	295
Through Hole		mm	20	50	90	80
T Slot Width		mm	****	****	14H7	18H7
Guide Block Width		mm	14h7	****	18h7	20h7
Servo Motor (FANUC*)			equal to α 2	equal to α 2	equal to α 12	equal to α 22
Gear Ratio			1/90	1/60	1/180	1/360
Max. R.P.M		min^{-1}	2.5	11.1	5.5	2.7
Motor R.P.M		min^{-1}	225	666	1000	1000
Min. Indexing Unit		deg.	0.001	0.001	0.001	0.001
Indexing Accuracy		sec.	60(10)	14(8)	12(8)	12(8)
Repeatability		sec.	± 3(3)	± 2(2)	± 2(2)	± 2(2)
Clamping Torque		N・m	****	****	****	****
Clamping Pressure		MPa	****	****	****	****
Permissible Machining Torque of Wheel		N・m	343	735	1980	6910
Weight		kg	60	115	350	800
Permissible Load	GL	kg	80	200	500	2500
	GL	kg	60	100	350	800
Max. Machining Force at Clamping	F	N	****	****	****	****
	L F	N・m	****	****	****	****
	L F	N・m	****	****	****	****
Permissible Work Inertia		$kg・m^2$	0.32	1.44	10.08	178.6

*Application for other motors, Meldas, Yasukawa, Siemens etc.

MDE150R

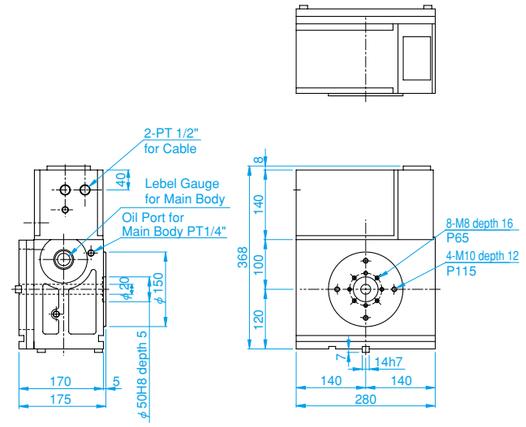

MDHE201R

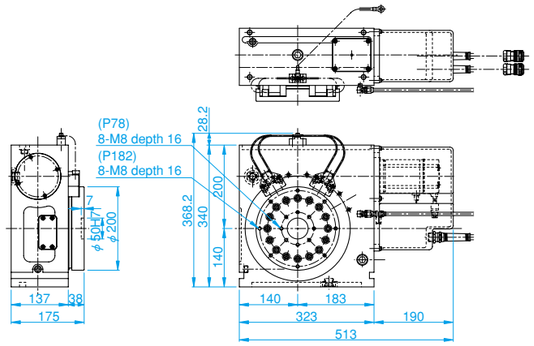

MDE400L

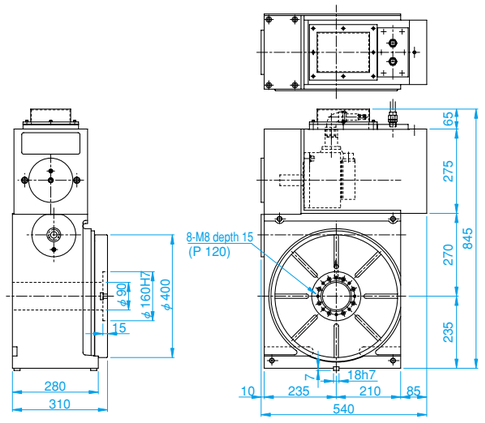

MDE630R

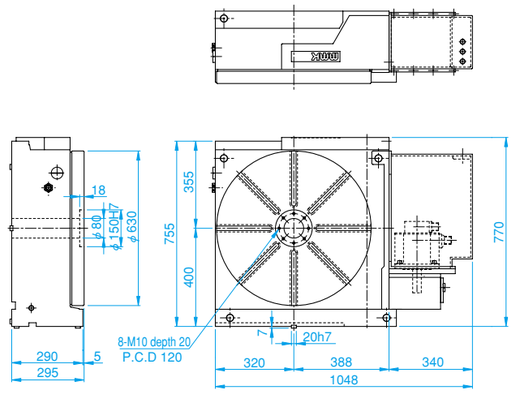

MDW TYPE

EDM - Deionized Water

Vertical or Horizontal Position

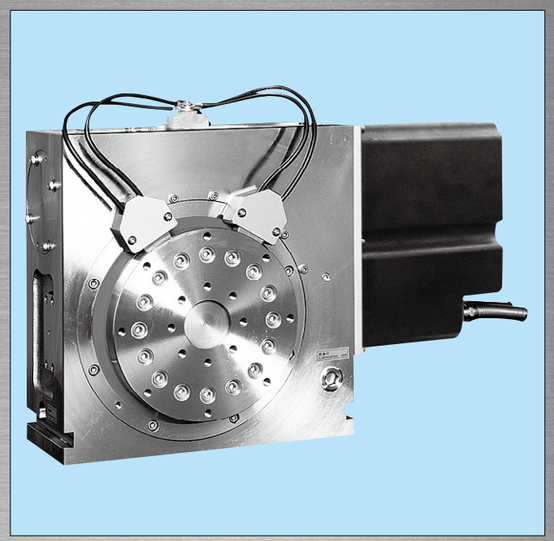

NC Rotary Table for Electric Discharge Machine

- Most suitable for wirecutting and small-hole drilling EDM
- Fully submersible in deionized water
- Zero-Backlash Worm Gear system

- **MDHW100L**
- **MDW150R**
- **MDHW201R**

■Specifications

Item \ Model		Unit	MDHW100L	MDW150R	MDHW201R
Table Diameter		mm	95	150	200
Vertical Center Height		mm	65	120	140
Horizontal Center Height		mm	157	175	175
Through Hole		mm	****	20	50
T Slot Width		mm	****	****	****
Guide Block Width		mm	****	14h7	****
Servo Motor (FANUC*)			equal to α 1	equal to α 2	equal to α 2
Gear Ratio			1/120	1/90	1/60
Max. R.P.M		min^{-1}	16.6	2.5	11.1
Motor R.P.M		min^{-1}	2000	225	666
Min. Indexing Unit		deg.	0.001	0.001	0.001
Indexing Accuracy		sec.	60(14)	60(10)	14(8)
Repeatability		sec.	± 3(4)	± 3(3)	± 2(2)
Clamping Torque		N・m	****	****	****
Clamping Pressure		MPa	****	****	****
Permissible Machining Torque of Wheel		N・m	343	343	735
Weight		kg	30	60	115
Permissible Load	GL	kg	60	80	200
	GL	kg	35	60	100
Max. Machining Force at Clamping	F	N	****	****	****
	L F	N・m	****	****	****
	L F	N・m	****	****	****
Permissible Work Inertia		$kg・m^2$	0.1	0.32	1.44

*Application for other motors, Meldas, Yasukawa, Siemens etc.

Note1: ( ) = higher indexing accuracy model with rotary scale.
In this case, the outside drawing will change slightly. (T.I.R)

- **MDHW100L**

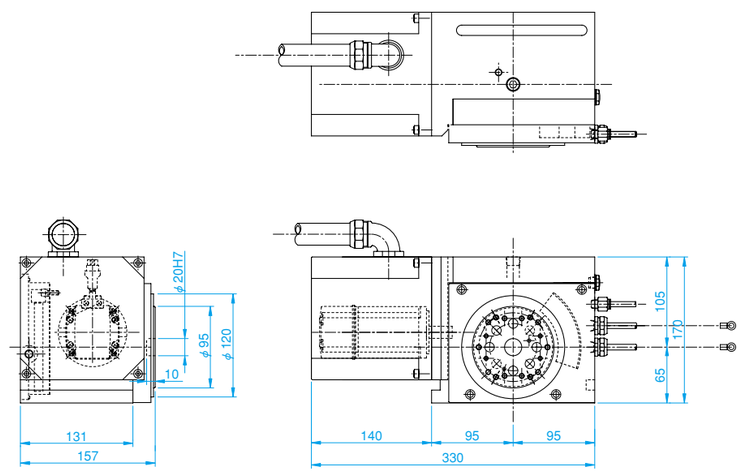

- **MDW150R**

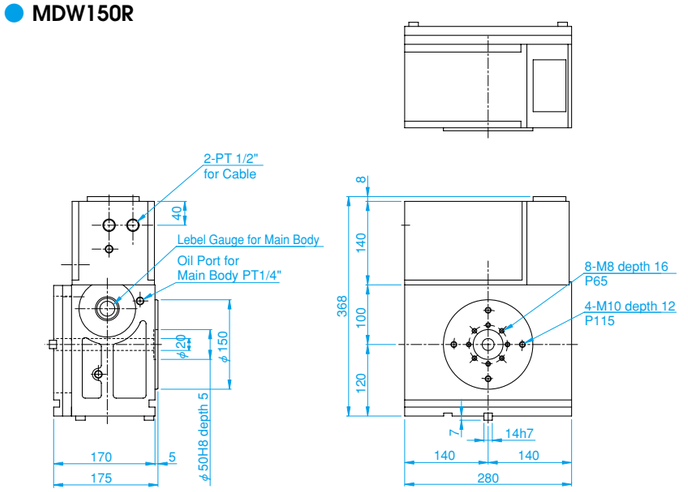

- **MDHW201R**

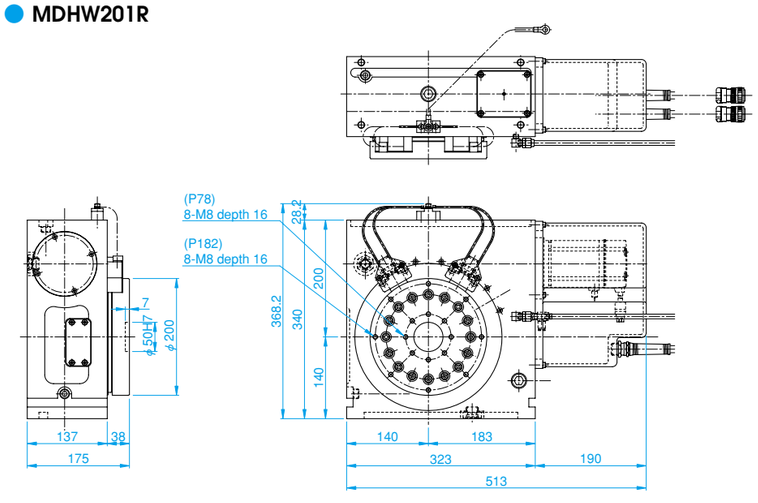

DD TYPE • DDAT TYPE
Direct Drive Motor

Direct Drive Table

- High Speed, Responsiveness, & Accuracy
- Simple structure without speed reducer

● DD166
● DD306
● DDAT506

DD TYPE (1-axis)

DDAT TYPE (2-axis)

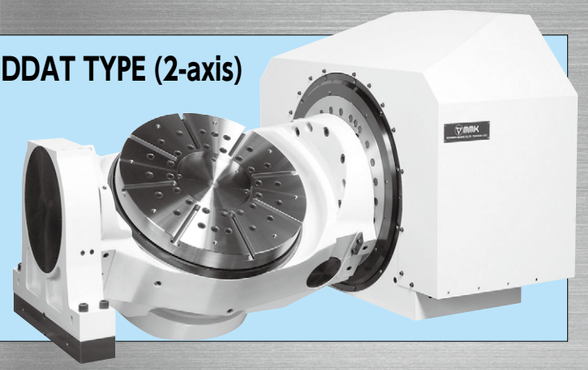

Note: Rotary scale is attached to DD type.

■Specifications

Item \ Model		Unit	DD166	DD306
Table Diameter		mm	160	300
Vertical Center Height		mm	160	170
Horizontal Center Height		mm	****	****
Through Hole		mm	****	****
T Slot Width		mm	****	****
Guide Block Width		mm	18h7	18h7
Servo Motor (FANUC*)			Dis85/400	Dis370/300
Gear Ratio			****	****
Max. R.P.M		min^{-1}	100	100
Motor R.P.M		min^{-1}	100	100
Min. Indexing Unit		deg.	0.001	0.001
Indexing Accuracy		sec.	8	8
Repeatability		sec.	± 2	± 2
Clamping Torque		N・m	****	****
Clamping Pressure		MPa	****	****
Weight		kg	100	166
Permissible Load	GL	kg	****	****
	GL	kg	30	200
Max. Machining Force at Clamping	F	N	16000	30700
	L F	N・m	1060	2900
	L F	N・m	343	1470
Permissible Work Inertia		$kg・m^2$	0.09	5

*Application for other motors, Meldas, Yasukawa, Siemens etc.

■Specifications

Item \ Model		Unit	DDAT506
Table Diameter		mm	500
Tilting Axis Center Height		mm	300
Table Height in Horizontal		mm	340
Through Hole		mm	****
T Slot Width		mm	14H7
Servo Motor (FANUC*)	Rotary Axis		Dis800/250
	Tilting Axis		Dis1500/200
Gear Ratio	Rotary Axis		****
	Tilting Axis		****
Max. R.P.M	Rotary Axis	min^{-1}	125
	Tilting Axis	min^{-1}	25
Motor R.P.M	Rotary Axis	min^{-1}	125
	Tilting Axis	min^{-1}	25
Min. Indexing Unit	Rotary Axis	deg.	0.001
	Tilting Axis	deg.	0.001
Indexing Accuracy	Rotary Axis	sec.	12
	Tilting Axis	sec.	15
Repeatability	Rotary Axis	sec.	± 2
	Tilting Axis	sec.	± 2
Clamping Torque	Rotary Axis	N・m	4312
	Tilting Axis	N・m	4312
Clamping Pressure	Rotary Axis/Tilting Axis	MPa	4.9
Weight		kg	1450
Permissible Load		kg	500
Permissible Work Inertia		$kg・m^2$	22.5

*Application for other motors, Meldas, Yasukawa, Siemens etc.

● DD166

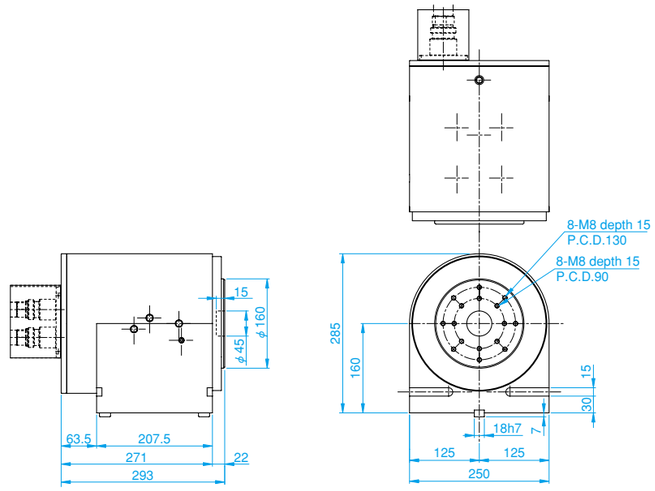

● DD306

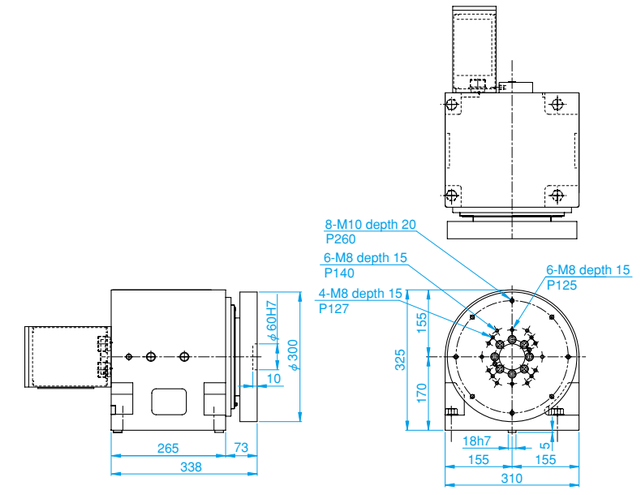

● DDAT506

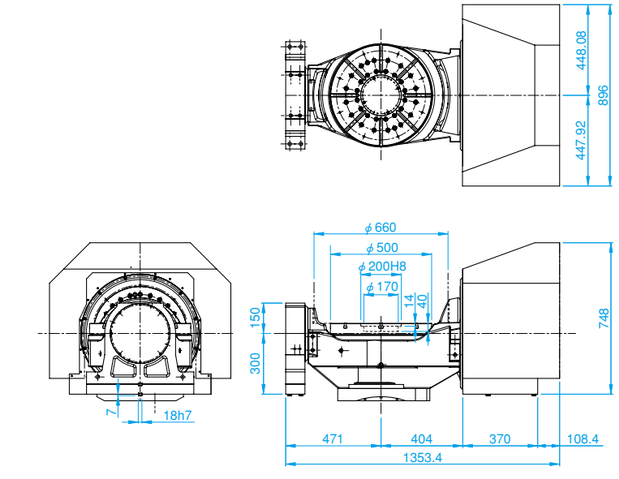

Controller 1-axis / 2-axis (PNC)

- Able to control 1-axis and 2-axis by M-code from machine
- Built-in touch screen allows for easy operation

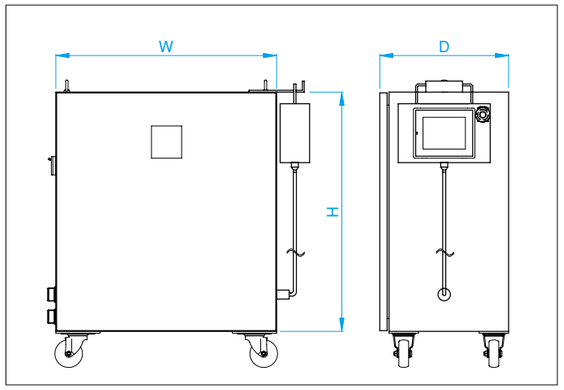

Specifications

Number of Axis	1-axis, 2-axis
Min. Inorement	± 0.001 deg.
Max. Angle	± 999.999 deg.
Program Imput	by Touch Screen
Program Capacity	30 100steps/1 program
Program System	Inoremental, Absolute
Fan-Shaped Dividing	2-999
Program Search Funcution from outside	30 channel
Feedback Function	Option
RS232 Function	Option: Direct Imput from NC Controller

Mode

Program Mode
M-Code Mode
MDI Mode
JOG Mode
Step Mode
Parameter Mode
DGN Mode

Model / External Form / Power Supply Capacity

Model	Number of Axis	Dimensions of External Form (mm)			Power Supply Capacity (KVA)	Weight (Kg)	Stall Torque of Application Servo Motor
		W	H	D			
PNC 1 -1	1	400	500	350	1.5	25	equal to 1N・m
PNC 4 -1	1	400	500	350	2.5	25	equal to 4N・m
PNC 8 -1	1	400	500	350	3	30	equal to 8N・m
PNC 12 -1	1	500	600	350	5	45	equal to 12N・m
PNC 22 -1	1	500	600	350	9	45	equal to 22N・m
PNC 30 -1	1	500	600	350	10	45	equal to 30N・m
PNC 1 -2	2	500	600	300	3	60	equal to 1N・m × 2
PNC 4 -2	2	500	600	300	5	60	equal to 4N・m × 2
PNC 8 -2	2	500	600	300	6	60	equal to 8N・m × 2
PNC 12 -2	2	600	600	350	10	70	equal to 12N・m × 2
PNC 22 -2	2	600	600	350	18	70	equal to 22N・m × 2
PNC 30 -2	2	600	600	350	20	70	equal to 30N・m × 2

Program Example

1. Even Split

N	Address		Axis	Data	Detail
0	g	91			Incremental
1	g	11			Clamp-Effect
2	F			3000	F3000 deg./min. Feed
3	A		A	360000	Max. Spliting Angle
4	d		A	5	Number of Split (Rotate 72 deg.)
5	M			99	Jump to N 0

fig. 1

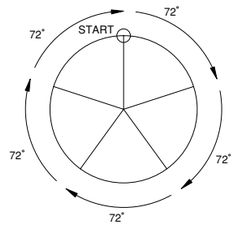

2. Angle Split

N	Address		Axis	Data	Detail
0	g	91			Incremental
1	g	11			Clamp-Effect
2	F			3000	3000 deg./min. Feed
3	A		A	60000	Rotate +60 deg.
4	A		A	90000	Rotate +90 deg.
5	A		A	45000	Rotate +45 deg.
6	A		A	55000	Rotate +55 deg.
7	A		A	110000	Rotate +110 deg.
8	M			99	Jump to N 0

fig. 2

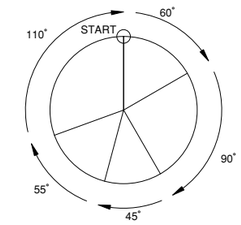

3. Circular Cutting and Zero Return

N	Address		Axis	Data	Detail
0	g	91		0	Incremental
1	g	11			Clamp-Effect
2	F	0		75	75 deg./min. Feed
3	A	0	A	60000	Rotate +60 deg.
4	F	0		333	333 deg./min. Feed
5	g	124		0	Zero Return
6	M	0		99	Jump to N 0

fig. 3

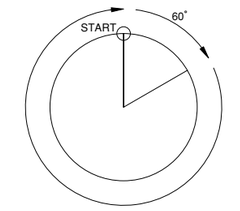

4. Continuous Rotation

N	Address		Axis	Data	Detail
0	g	10		0	Clamp Cancel
1	F	0		33	33 deg./min. Feed
2	g	122		0	Continuous Rotation
3	M	0		99	Jump to N 0

fig. 4

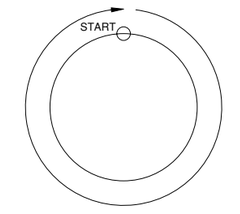

Tail Stock - Manual Type (TC•THC)

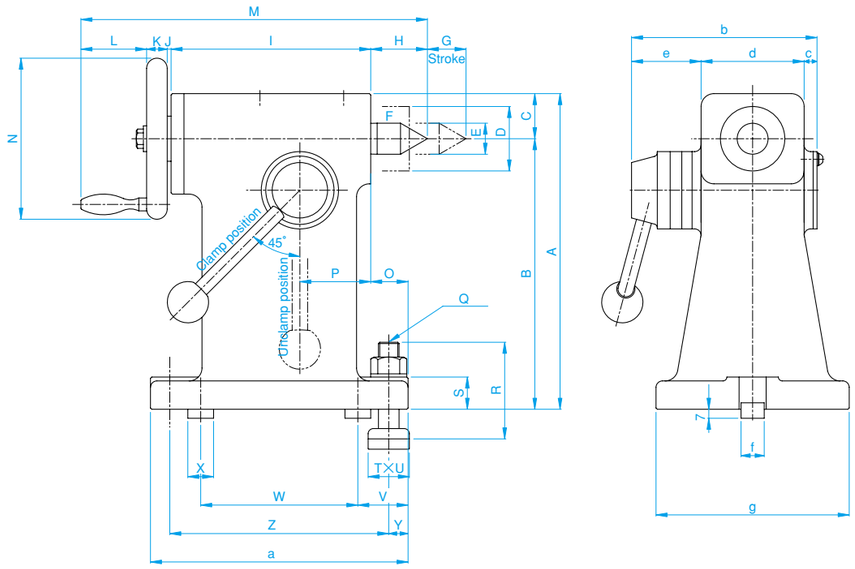

Model	A	B	C	D	E	F	G	H	I	J	K	L	M	N	O	P	Q	R	S	T	U
THC200	220	185	35	ϕ 50	ϕ 24.1	MT # 3	30	44	155	2	17	51	269 ~ 299	ϕ 125	29	55	M16	75	25	32	27
TC300	245	210	35	ϕ 50	ϕ 24.1	MT # 3	30	44	155	2	17	51	269 ~ 299	ϕ 125	29	55	M16	75	25	32	27
THC300	270	235	35	ϕ 50	ϕ 24.1	MT # 3	30	44	155	2	17	51	269 ~ 299	ϕ 125	29	55	M16	75	25	32	27
TC400	300	255	45	ϕ 65	ϕ 31.6	MT # 4	60	52.5	215	2	20	64	353.5 ~ 413.5	ϕ 140	20	75	M16	75	30	32	27
TC500	325	280	45	ϕ 65	ϕ 31.6	MT # 4	60	52.5	215	2	20	64	353.5 ~ 413.5	ϕ 140	20	75	M16	75	30	32	27
TC600	460	400	60	ϕ 80	ϕ 44.7	MT # 5	65	70.5	300	8	18	83	479.5 ~ 544.9	ϕ 160	15	100	M20	100	40	40	30
TC1000	695	600	95	ϕ 125	ϕ 63.8	MT # 6	100	88	450	23.5	34	118	713.5 ~ 813.5	ϕ 500	42.5	140	M24	150	70	32	24

Model	V	W	X	Y	Z	a	b	c	d	e	f	g	Applicable Model
THC200	39	122	20	15	170	200	144	10	80	54	18h7	150	MDH233
TC300	39	122	20	15	170	200	144	10	80	54	18h7	150	MD323
THC300	39	122	20	15	170	200	144	10	80	54	18h7	150	MDH323
TC400	39	172	20	15	220	250	160	8	100	52	18h7	180	MD403
TC500	39	172	20	15	220	250	160	8	100	52	18h7	180	MD503
TC600	50	215	20	20	275	315	191	8	125	58	22h7	300	MD630
TC1000	82.5	360	28	30	450	510	287.5	10.5	190	87	32h7	450	MD1000

Tail Stock - Hydraulic Type (TP•THP)

Specifications

Item \ Model	Unit	THP200	TP300	THP300	TP400	TP500
Max. Hydraulic Pressure	MPa	4.9	4.9	4.9	4.9	4.9
Pressure Application Area	cm^2	19.5	19.5	19.5	32.4	32.4
Thrust Force at 1.96MPa	KN	3.9	3.9	3.9	6.4	6.4
Oil Required	cc	200	200	200	410	410

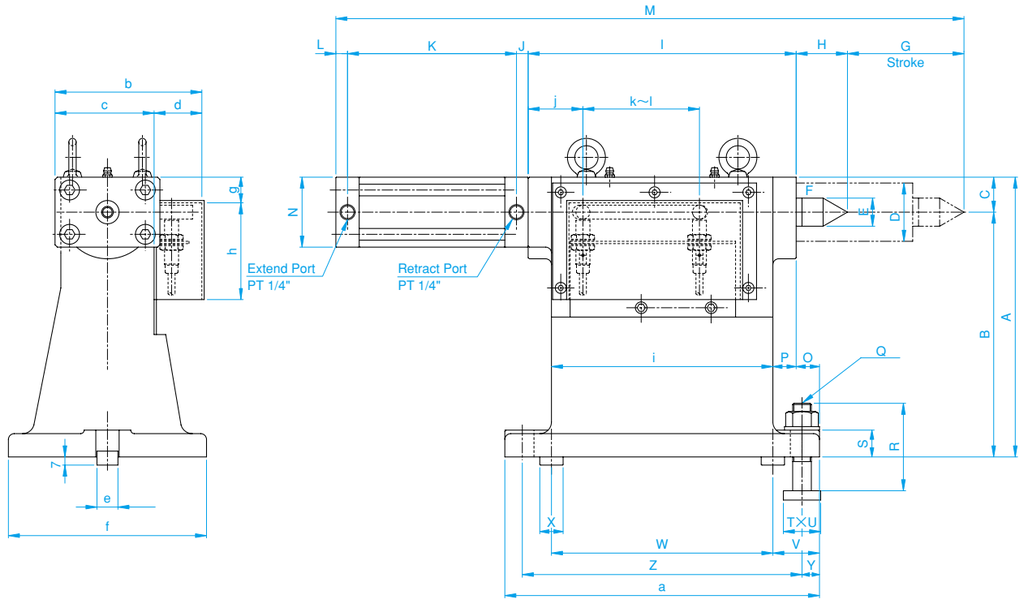

Model	A	B	C	D	E	F	G	H	I	J	K	L	M	N	O	P	Q	R	S	T	U
THP200	215	185	30	ϕ 50	ϕ 24.1	MT # 3	100	44	230	10	145	10	439 ~ 539	60	20	20	2-M16	75	23	32	27
TP300	240	210	30	ϕ 50	ϕ 24.1	MT # 3	100	44	230	10	145	10	439 ~ 539	60	20	20	2-M16	75	23	32	27
THP300	265	235	30	ϕ 50	ϕ 24.1	MT # 3	100	44	230	10	145	10	439 ~ 539	60	20	20	2-M16	75	23	32	27
TP400	295	255	40	ϕ 65	ϕ 31.6	MT # 4	120	52.5	280	10	173	51	566.5 ~ 686.5	80	20	20	2-M16	75	25	32	27
TP500	320	280	40	ϕ 65	ϕ 31.6	MT # 4	120	52.5	280	10	173	51	566.5 ~ 686.5	80	20	20	2-M16	75	25	32	27

Model	V	W	X	Y	Z	a	b	c	d	e	f	g	h	i	j	k	l	Applicable Model
THP200	40	190	20	15	240	270	126	85	41	18h7	170	22	83	190	47	40	100	MDH233
TP300	40	190	20	15	240	270	126	85	41	18h7	170	22	83	190	47	40	100	MD323
THP300	40	190	20	15	240	270	126	85	41	18h7	170	22	83	190	47	40	100	MDH323
TP400	42.5	235	20	15	290	320	150	110	40	18h7	220	26	108	240	52	40	120	MD403
TP500	42.5	235	20	15	290	320	150	110	40	18h7	220	26	108	240	52	40	120	MD503

Scroll Chuck - Manual Type (M•RS)

● **M6 · M8**

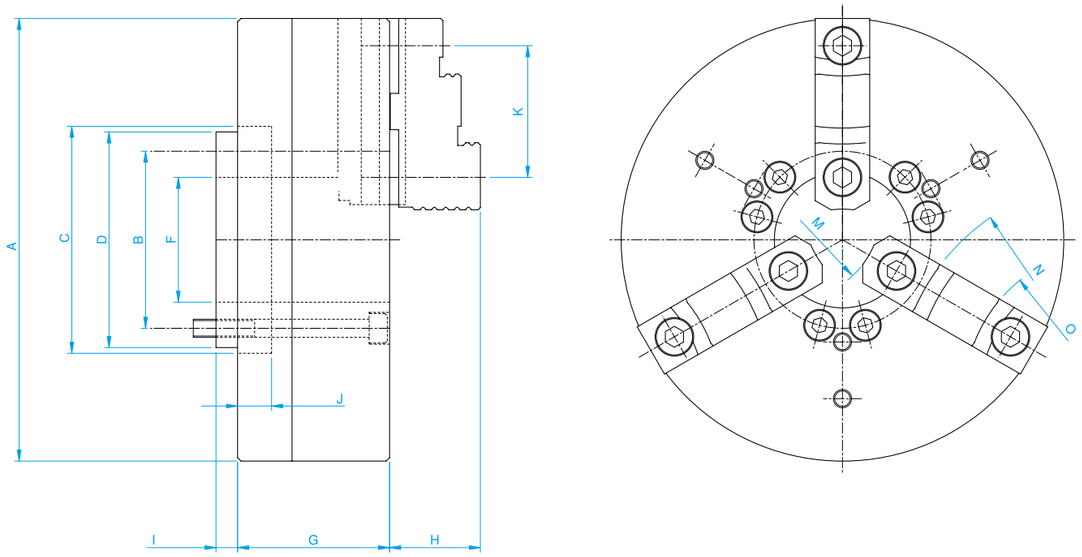

● **RS12 · 15 · 18 · 21**

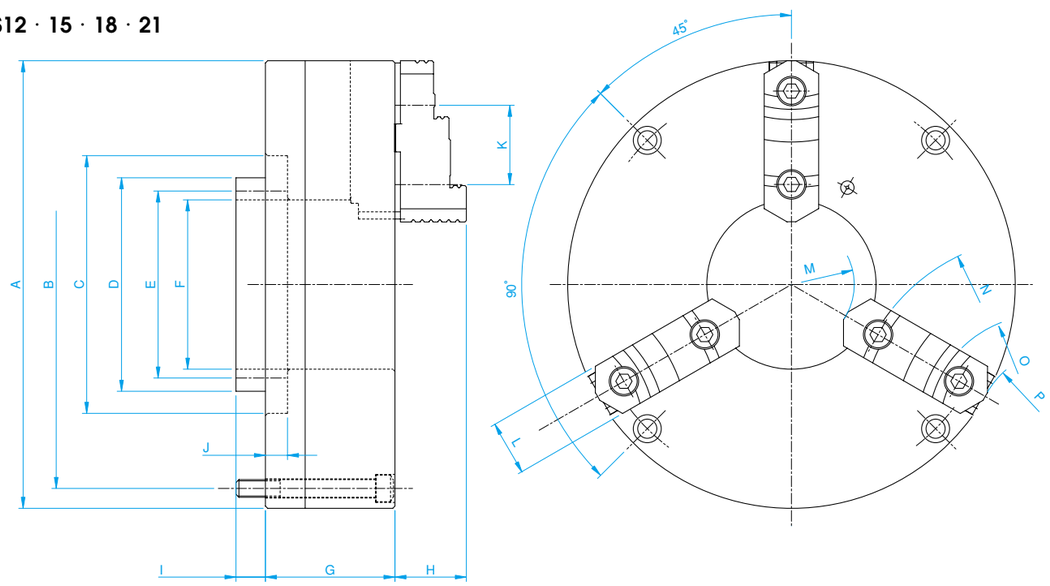

Model	Weight (kg)	A	B	C	D	E	F	G	H	I	J	K	L	M	N	O	P
M6	8.5	165	58	80	95	—	40	65	38	15.5	10	42	24	ϕ 4 ~ ϕ 55	ϕ 60 ~ ϕ 101	ϕ 43 ~ ϕ 94	—
M8	13.5	195	78	100	95	—	60	67	60	10.5	15	58	24	ϕ 10 ~ ϕ 80	ϕ 125 ~ ϕ 190	ϕ 65 ~ ϕ 130	—
RS12	48	304	277	175	145	127	115	88	48.8	20	15	63.4	37	ϕ 66 ~ ϕ 150	ϕ 247 ~ ϕ 331	ϕ 155 ~ ϕ 239	ϕ 75 ~ ϕ 159
RS15	80	381	346	240	200	182	170	102	59.9	20	15	76.2	45	ϕ 102 ~ ϕ 183	ϕ 302 ~ ϕ 383	ϕ 206 ~ ϕ 286	ϕ 110 ~ ϕ 191
RS18	116	457	424	240	200	182	170	106.3	59.9	20	15	76.2	45	ϕ 127 ~ ϕ 183	ϕ 302 ~ ϕ 450	ϕ 214 ~ ϕ 362	ϕ 110 ~ ϕ 191
RS21	190	533	495	310	295	275	254	144.5	77	27.5	15	80	55	ϕ 204 ~ ϕ 292	ϕ 380 ~ ϕ 438	ϕ 300 ~ ϕ 388	—

Power Chuck - Hydraulic Type (Z•HH)

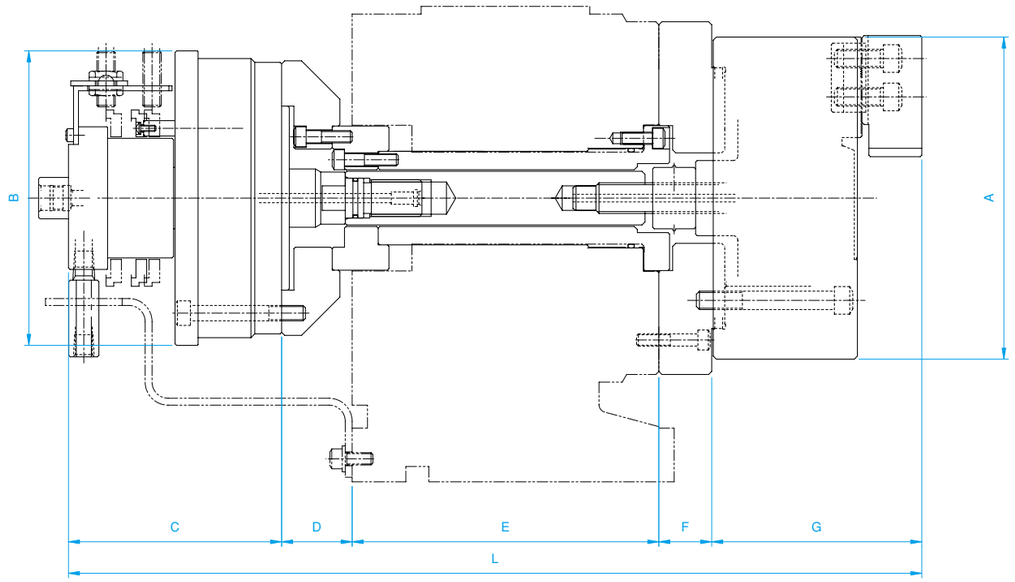

Model	Stroke of Jaw	A	B	C	D	E	F	G	L
Z 6 × RNKP 105 - 15	ϕ 5.8	165	175	130	35	200	25	107	497
Z 8 × RNKP 120 - 25	ϕ 7.6	210	210	130	35	200	25	136	526
Z 10 × RNKP 135 - 20	ϕ 9	254	225	139	35	220	30	152	576
Z 12 × RNKP 200 - 35	ϕ 9	305	250	260.5	48	220	35	174	737.5
Z 15 × RNKP 200 - 35	ϕ 11.3	381	250	260.5	48	290	35	210	843.5
Z 18 × RNKP 200 - 35	ϕ 11.3	457	250	260.5	48	290	35	210	843.5
HH21 × RNKP 200 - 35	ϕ 12	533	250	260.5	48	290	35	245.8	879.3

Chucking System

■**Specifications**

Type / Table Diameter	Manual		Hydraulic		
	Model	Size	Model	Size	Cylinder
ϕ 230	M6	165	Z 6	165	RNKP 105 - 15
	M8	195	Z 8	210	RNKP 120 - 25
ϕ 325	M8	195	Z 10	254	RNKP 135 - 20
	RS12	304	Z 12	305	RNKP 200 - 35
ϕ 400	RS15	381	Z 15	381	RNKP 200 - 35
ϕ 500	RS18	457	Z 18	457	RNKP 200 - 35
ϕ 630	RS21	533	HH21	533	RNKP 200 - 35

Air-Hydraulic Booster (AH)

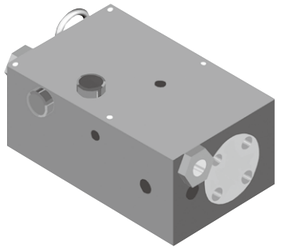

AH8

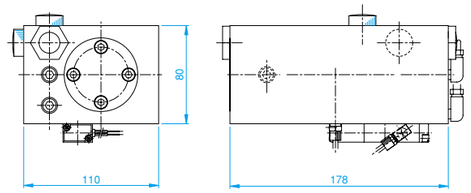

AH9

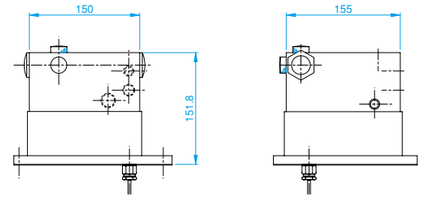

AH10

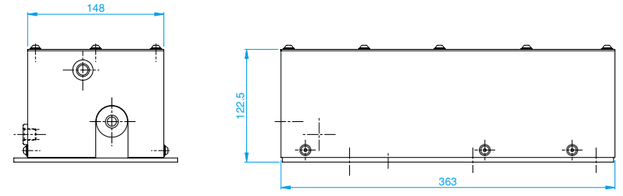

T-Slot / Clamping Bolt

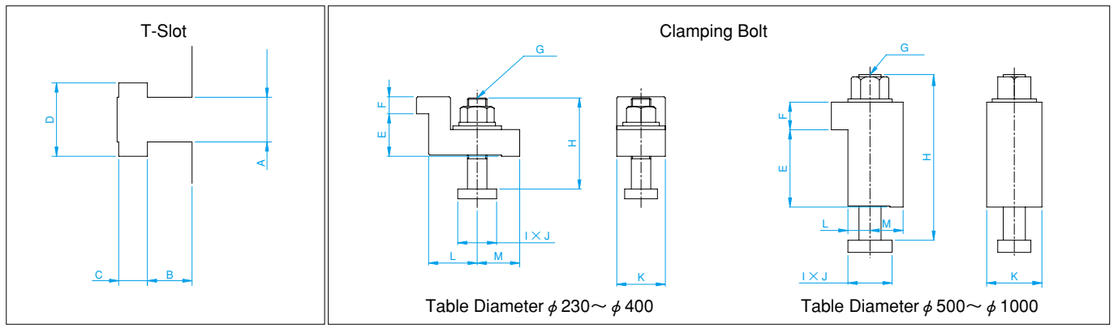

Type / Table Diameter	T-Slot				Clamping Bolt								
	A*1	B	C	D	E	F	G	H	I	J	K	L	M
ϕ 230	12H8	12	8	19	35	15	M16	70	27	32	40	40	35
ϕ 325	14H7	14	9	23	35	15	M16	70	27	32	40	40	35
ϕ 400	14H7	14	9	23	40	15	M16	70	27	32	40	40	35
ϕ 500	18H7	18	12	30	50	20	M16	120	27	32	50	20	30
ϕ 630	18H7	18	12	30	70	20	M20	150	38	40	50	20	30
ϕ 800	18H7	18	12	30	70	20	M20	150	38	40	50	20	30
ϕ 1000	28H12	28	20	46	90	30	M24	175	44	50	60	22	43

*1 The dimensional tolerance for T-slot A applies to four standard slots of the vertical and horizontal cross.

Standard of Accuracy

* Accuracy data are the actual results obtained under static testing conditions at MMK.

NC Rotary Table Unit (mm)

No.	Inspection Item	Permissible Value
1	Run out of Spindle Center-Hole	Near Side 0.01
	Run out of Chuck Out-Diameter (Install with Chuck)	0.03
2	Parallelism between Table Center Line and Bottom Surface	0.03
3	Parallelism between Spindle Center Line and Guide Blocks	0.02 / 300
4	Difference between Spindle Center Line and Guide Block	0.02 / 300
5	Straightness of Table Top Surface	0.02 / 300
6	Parallelism between Table Top and Bottom Surface	0.02 / 300
7	Run out of Table Top Surface	0.02
8	Run out of Table Out Diameter Surface	0.02

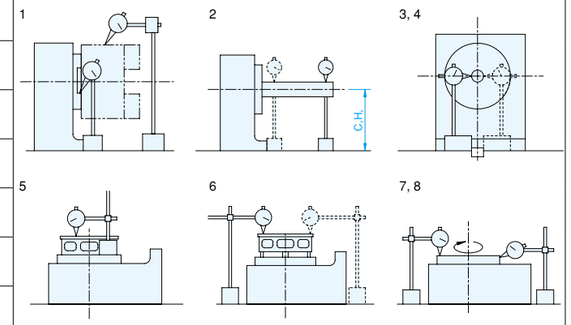

NC Tilting Rotary Table Unit (mm)

No.	Inspection Item	Permissible Value
1	Run out of Spindle Center-Hole	Near Side 0.01
2	Straightness of Table Top Surface	0.02 / 300
3	Parallelism between Table Top and Bottom Surface	0.02 / 300
4	Run out of Table Top Surface	0.01
5	Parallelism between Tilting Spindle Line and Bottom Surface H 1-H 2 = (mx+my) - (m'x - m'y) / 2	0.02 / 300 H 1-H 2

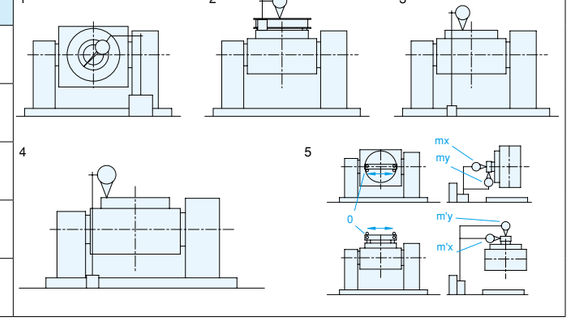

Tail Stock Unit (mm)

No.	Inspection Item	Permissible Value
1	Difference between Centor Line and Guide Blocks	0.02
2	Parallelism between Center Line and Bottom Height	0.01 / Stroke"S"
3	Parallelism between Center Line and Bottom Surface	0.01 / Stroke"S"
4	Difference between Rotary Table and Center Height	0.00 to 0.02

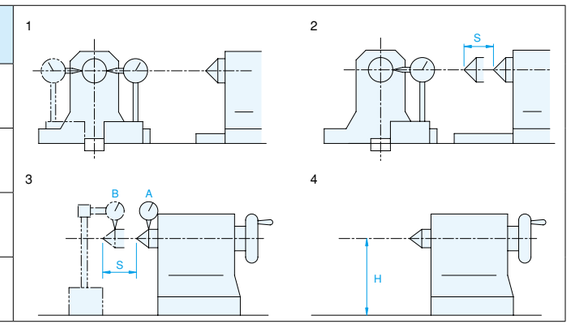

High accuracy products available upon request

Note1: Specifications are subject to change for improvement without notice.
Accuracy and capacity data may vary depending on any conditions such as temperature, etc. These numbers are not guaranteed.

Applications

EDM

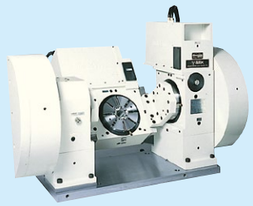

●MDEAT150-120

●MDET150

for Small-Hole Drilling Machine
- Tilting -

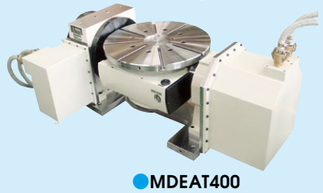

●MDEAT400

for Small-Hole Drilling, Large Machine
- Tilting -

●MDWAT500

for Wire Cutting

●MDHWi100L

for Small-Hole Drilling Machine
- Tilting -

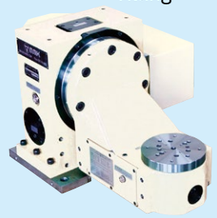

●MDEATii161-2

Blade Machining

Synchronous Type

●MDi323RL

●MDV233R-13

Twin Type

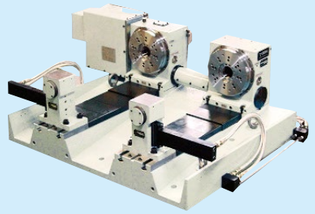

●MDH233L-2

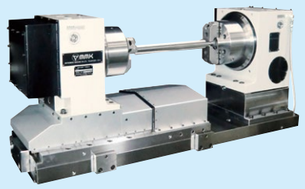

●MDH256L-01

Multi-Axis
- Tilting -

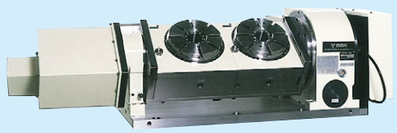

●MDATi 150-2

●MDATi 300-2

- Tilting -

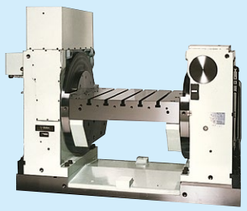

●MDUi800-PDM

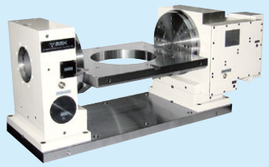

●MDB322R-PDM-44

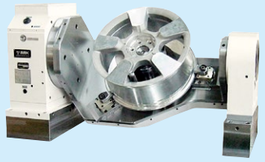

●MD406R-PDM

for Crank-shaft

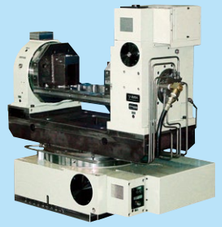

●MD630R×ST400×MDU400R-01

for Holder-Clamp

●MDU300L-HCS

Slide Support Type

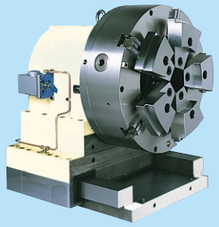

●TS600

2 Face Type

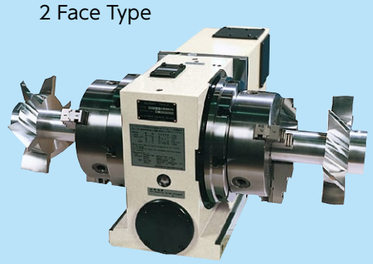

●MDD200

Built-In National Taper Type
-Tilting -

●MDAT200B-H

AWC

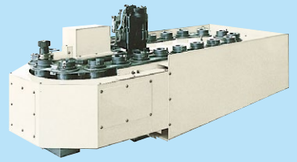

with Work Holder Attachment

●MDH200R-H

with AJC Chuck

●MD500R×AJC-15

with Hydraulic Chuck

●MD300R×U-8

with Tail Stock

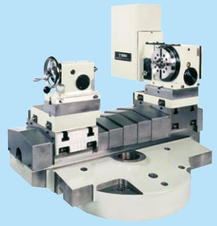

●MDHi152R

for Grinding Center

●MDO406R×STC-15

Pallet Clamp System
-Tilting -

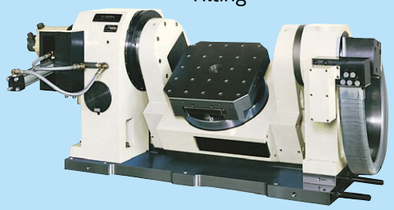

●MDAT400-ECT-PCS

Manual Type
- Tilting -

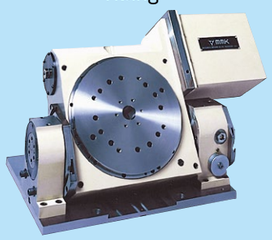

●MDT322

Twin Type

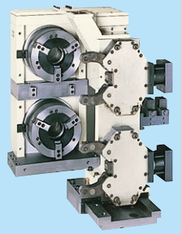

●MDV300-2×HN-160

Twin Type

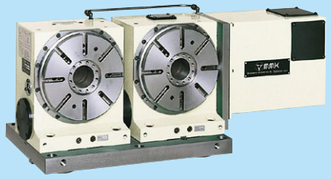

●MDH232R-2